TOSHIBA CMOS DIGITAL INTEGRATED CIRCUIT SILICON MONOLITHIC

TC4584BP, TC4584BF, TC4584BFN

(Note) The JEDEC SOP (FN) is not available in Japan.

TC4584B HEX SCHMITT TRIGGER

The TC4584B is the 6-circuit inverter having the Schmitt trigger function at the input terminal.
That is, since the circuit threshold level voltages at the leading and trailing edges of input waveform are different (V_P,V_N), the TC4584B can be used in the broad range application including line receiver, waveform shaping circuit, astable multivibrator, monostable multivibrator, etc.
In addition to ordinary inverter.
Since the pins are compatible with the TC4069UB, the substitution is also possible.

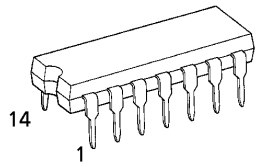

P (DIP14-P-300-2.54)
Weight : 0.96g (Typ.)

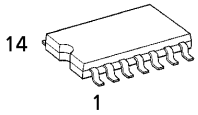

F (SOP14-P-300-1.27)
Weight : 0.18g (Typ.)

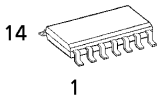

FN (SOL14-P-150-1.27)
Weight : 0.12g (Typ.)

MAXIMUM RATINGS

CHARACTERISTIC	SYMBOL	RATING	UNIT
DC Supply Voltage	V_{DD}	$V_{SS}-0.5 \sim V_{SS}+20$	V
Input Voltage	V_{IN}	$V_{SS}-0.5 \sim V_{DD}+0.5$	V
Output Voltage	V_{OUT}	$V_{SS}-0.5 \sim V_{DD}+0.5$	V
DC Input Current	I_{IN}	± 10	mA
Power Dissipation	P_D	300 (DIP) / 180 (SOIC)	mW
Operating Temperature Range	T_{opr}	− 40~85	°C
Storage Temperature Range	T_{stg}	− 65~150	°C

Searchdatasheet.com

PIN ASSIGNMENT

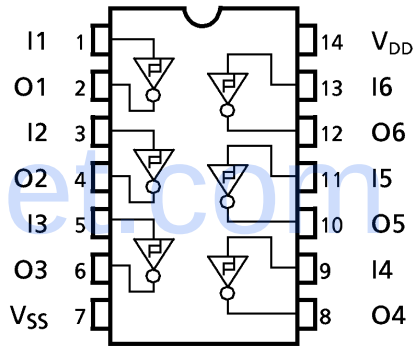

(TOP VIEW)

INPUT / OUTPUT VOLTAGE CHARACTERISTIC

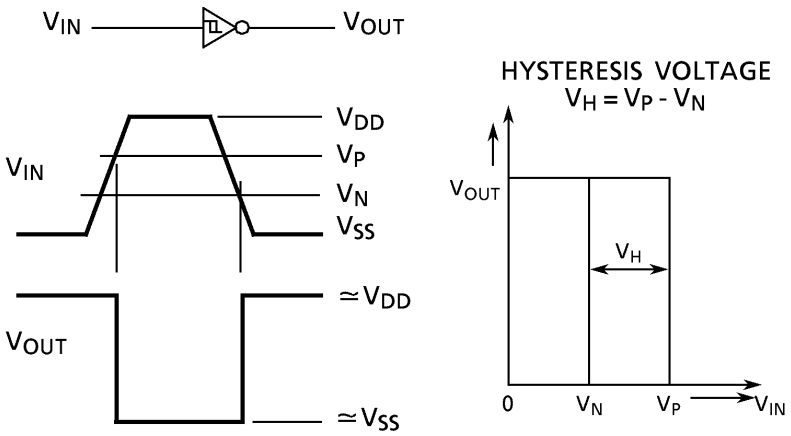

* INPUT-OUTPUT VOLTAGE WAVEFORM

* TRANSFER CHARACTERISTICS

LOGIC DIAGRAM

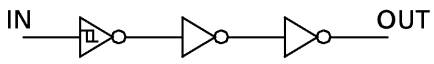

RECOMMENDED OPERATING CONDITIONS (V_{SS} = 0V)

CHARACTERISTIC	SYMBOL	TEST CONDITION	MIN.	TYP.	MAX.	UNITS
DC Supply Voltage	V_{DD}		3	—	18	V
Input Voltage	V_{IN}		0	—	V_{DD}	V

STATIC ELECTRICAL CHARACTERISTICS (V_{SS} = 0V)

CHARACTERISTIC	SYMBOL	TEST CONDITION	V_{DD} (V)	−40°C MIN.	−40°C MAX.	25°C MIN.	25°C TYP.	25°C MAX.	85°C MIN.	85°C MAX.	UNIT
High-Level Output Voltage	V_{OH}	$\lvert I_{OUT} \rvert < 1\mu A$, $V_{IN} = V_{SS}, V_{DD}$	5	4.95	—	4.95	5.00	—	4.95	—	V
			10	9.95	—	9.95	10.00	—	9.95	—	
			15	14.95	—	14.95	15.00	—	14.95	—	
Low-Level Output Voltage	V_{OL}	$\lvert I_{OUT} \rvert < 1\mu A$, $V_{IN} = V_{SS}, V_{DD}$	5	—	0.05	—	0.00	0.05	—	0.05	
			10	—	0.05	—	0.00	0.05	—	0.05	
			15	—	0.05	—	0.00	0.05	—	0.05	
Output High Current	I_{OH}	V_{OH} = 4.6V, $V_{IN} = V_{SS}$	5	−0.61	—	−0.51	−1.0	—	−0.42	—	mA
		V_{OH} = 2.5V, $V_{IN} = V_{SS}$	5	−2.50	—	−2.10	−4.0	—	−1.70	—	
		V_{OH} = 9.5V, $V_{IN} = V_{SS}$	10	−1.50	—	−1.30	−2.2	—	−1.10	—	
		V_{OH} = 13.5V, $V_{IN} = V_{SS}$	15	−4.00	—	−3.40	−9.0	—	−2.80	—	
Output Low Current	I_{OL}	V_{OL} = 0.4V, $V_{IN} = V_{DD}$	5	0.61	—	0.51	1.5	—	0.42	—	
		V_{OL} = 0.5V, $V_{IN} = V_{DD}$	10	1.50	—	1.30	3.8	—	1.10	—	
		V_{OL} = 1.5V, $V_{IN} = V_{DD}$	15	4.00	—	3.40	15.0	—	2.80	—	
Positive Trigger Threshold Voltage	V_P	V_{OUT} = 0.5V	5	2.05	3.75	2.15	3.0	3.75	2.15	3.85	V
		V_{OUT} = 1.0V	10	4.80	7.60	4.90	6.4	7.60	4.90	7.70	
		V_{OUT} = 1.5V	15	7.80	11.60	7.90	9.9	11.60	7.90	11.70	
Negative Trigger Threshold Voltage	V_N	V_{OUT} = 4.5V	5	1.25	2.95	1.25	2.3	2.85	1.15	2.85	
		V_{OUT} = 9.0V	10	2.40	5.20	2.40	3.8	5.10	2.30	5.10	
		V_{OUT} = 13.5V	15	3.40	7.20	3.40	5.2	7.10	3.30	7.10	
Hysteresis Voltage	V_H		5	0.10	1.25	0.25	0.65	1.25	0.25	1.40	
			10	1.80	3.50	1.90	2.60	3.50	1.90	3.60	
			15	3.70	5.60	3.80	4.70	5.60	3.80	5.70	
Input Current "H" Level	I_{IH}	V_{IH} = 18V	18	—	0.1	—	10^{-5}	0.1	—	1.0	μA
Input Current "L" Level	I_{IL}	V_{IL} = 0V	18	—	−0.1	—	-10^{-5}	−0.1	—	−1.0	
Quiescent Supply Current	I_{DD}	$V_{IN} = V_{SS}, V_{DD}$ *	5	—	1	—	0.001	1	—	7.5	μA
			10	—	2	—	0.002	2	—	15.0	
			15	—	4	—	0.004	4	—	30.0	

* All valid input combinations.

DYNAMIC ELECTRICAL CHARACTERISTICS (Ta = 25°C, Vss = 0V, C_L = 50pF)

CHARACTERISTIC	SYMBOL	TEST CONDITION	V_{DD}(V)	MIN.	TYP.	MAX.	UNIT
Output Transition Time (Low to High)	t_{TLH}		5	—	80	200	ns
			10	—	50	100	
			15	—	40	80	
Output Transition Time (High to Low)	t_{THL}		5	—	80	200	
			10	—	50	100	
			15	—	40	80	
Propagation Delay Time	t_{pLH} t_{pHL}		5	—	170	340	
			10	—	80	160	
			15	—	60	120	
Input Capacitance	C_{IN}			—	5	7.5	pF

CIRCUIT AND WAVEFORM FOR MEASUREMENT OF DYNAMIC CHARACTERISTICS

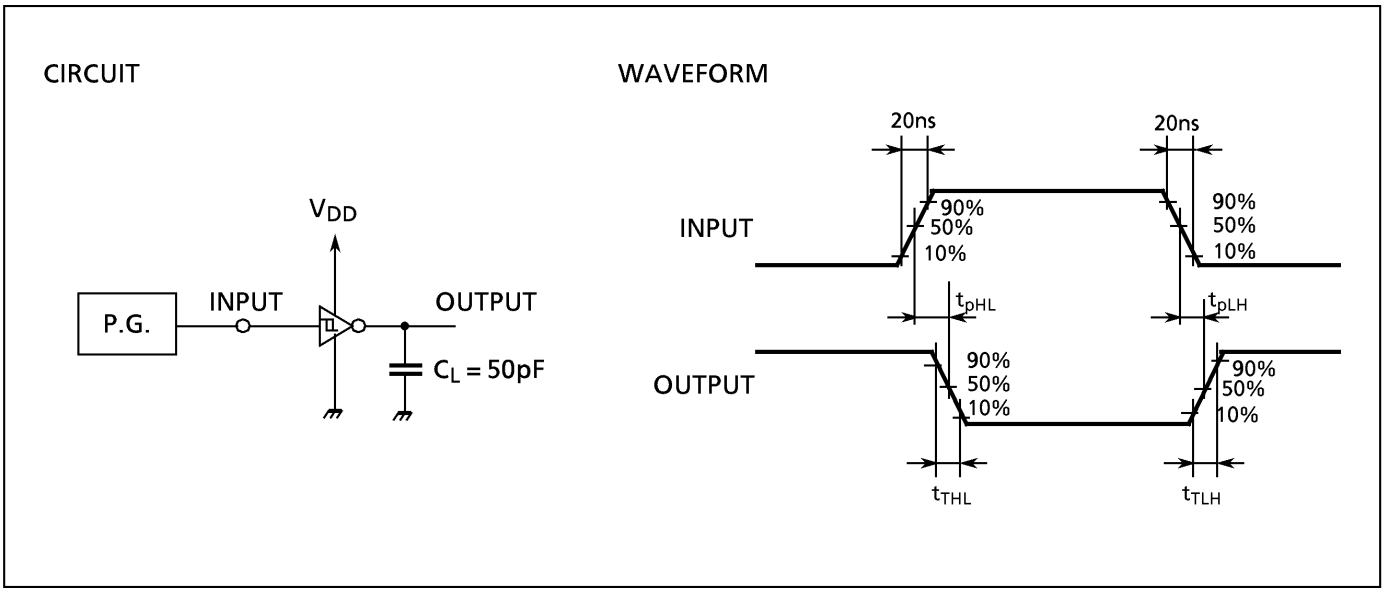

DIP 14PIN PACKAGE DIMENSIONS (DIP14-P-300-2.54) Unit in mm

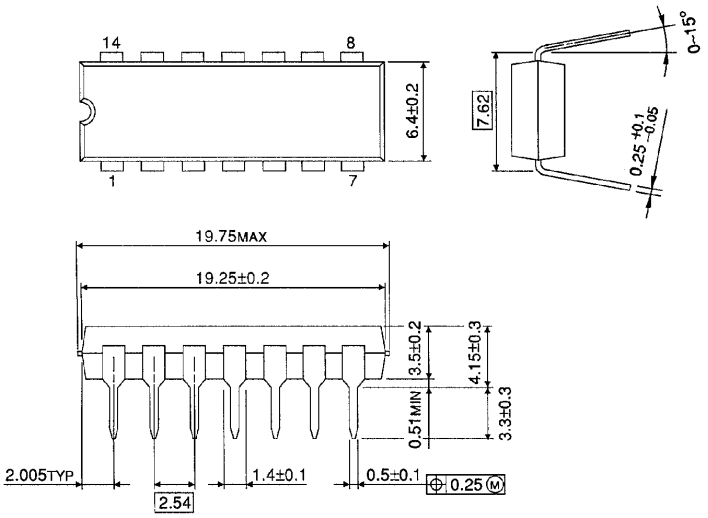

Weight : 0.96g (Typ.)

SOP 14PIN (200mil BODY) PACKAGE DIMENSIONS (SOP14-P-300-1.27) Unit in mm

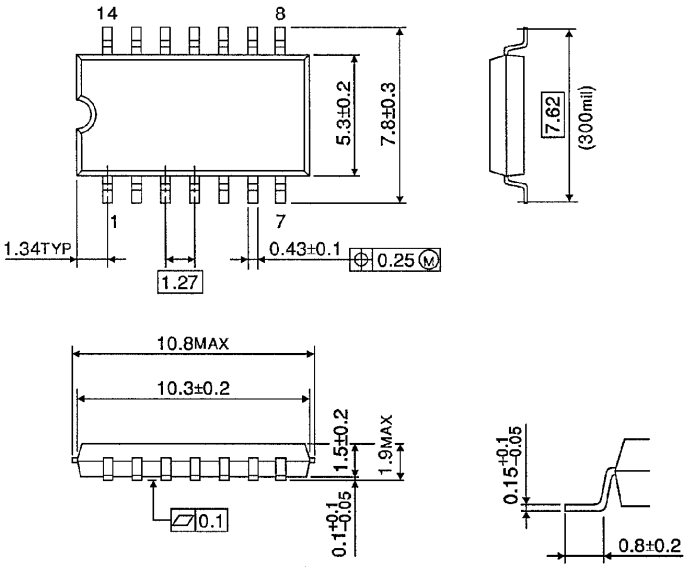

Weight : 0.18g (Typ.)

SOP 14PIN (150mil BODY) PACKAGE DIMENSIONS (SOL14-P-150 -1.27) Unit in mm

(Note) This package is not available in Japan.

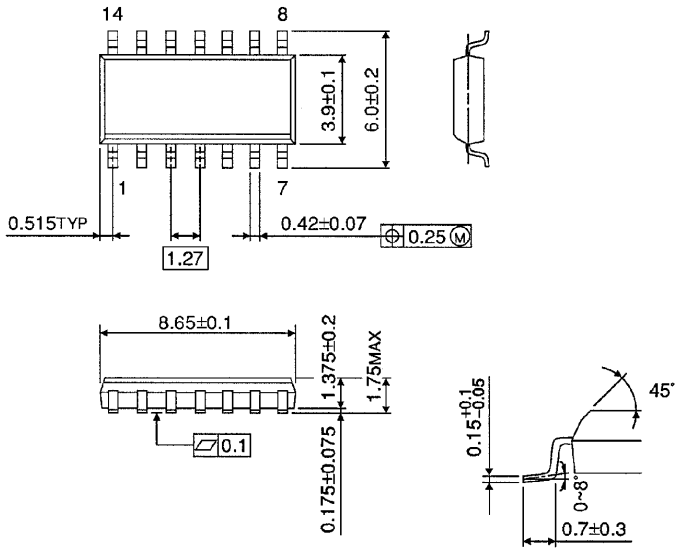

Weight : 0.12g (Typ.)

RESTRICTIONS ON PRODUCT USE

000707EBA

- TOSHIBA is continually working to improve the quality and reliability of its products. Nevertheless, semiconductor devices in general can malfunction or fail due to their inherent electrical sensitivity and vulnerability to physical stress. It is the responsibility of the buyer, when utilizing TOSHIBA products, to comply with the standards of safety in making a safe design for the entire system, and to avoid situations in which a malfunction or failure of such TOSHIBA products could cause loss of human life, bodily injury or damage to property.
  In developing your designs, please ensure that TOSHIBA products are used within specified operating ranges as set forth in the most recent TOSHIBA products specifications. Also, please keep in mind the precautions and conditions set forth in the "Handling Guide for Semiconductor Devices," or "TOSHIBA Semiconductor Reliability Handbook" etc..

- The TOSHIBA products listed in this document are intended for usage in general electronics applications (computer, personal equipment, office equipment, measuring equipment, industrial robotics, domestic appliances, etc.). These TOSHIBA products are neither intended nor warranted for usage in equipment that requires extraordinarily high quality and/or reliability or a malfunction or failure of which may cause loss of human life or bodily injury ("Unintended Usage"). Unintended Usage include atomic energy control instruments, airplane or spaceship instruments, transportation instruments, traffic signal instruments, combustion control instruments, medical instruments, all types of safety devices, etc.. Unintended Usage of TOSHIBA products listed in this document shall be made at the customer's own risk.

- The products described in this document are subject to the foreign exchange and foreign trade laws.

- The information contained herein is presented only as a guide for the applications of our products. No responsibility is assumed by TOSHIBA CORPORATION for any infringements of intellectual property or other rights of the third parties which may result from its use. No license is granted by implication or otherwise under any intellectual property or other rights of TOSHIBA CORPORATION or others.

- The information contained herein is subject to change without notice.