LM217, LM317

1.2 V to 37 V adjustable voltage regulators

Datasheet - production data

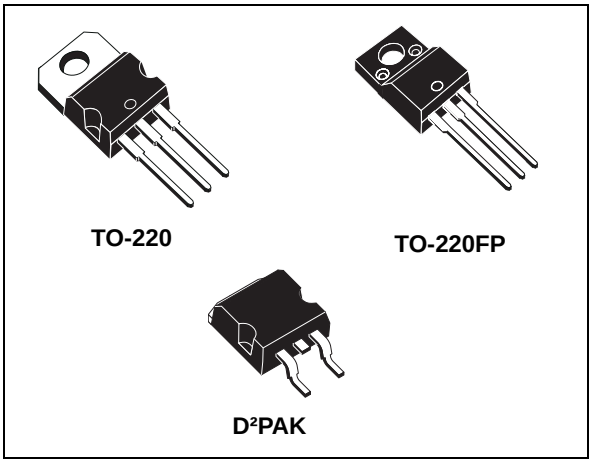

Description

The LM217, LM317 are monolithic integrated circuits in TO-220, TO-220FP and D²PAK packages intended for use as positive adjustable voltage regulators. They are designed to supply more than 1.5 A of load current with an output voltage adjustable over a 1.2 to 37 V range. The nominal output voltage is selected by means of a resistive divider, making the device exceptionally easy to use and eliminating the stocking of many fixed regulators.

Features

- Output voltage range: 1.2 to 37 V
- Output current in excess of 1.5 A
- 0.1 % line and load regulation
- Floating operation for high voltages
- Complete series of protections: current limiting, thermal shutdown and SOA control

Searchdatasheet.com

Table 1. Device summary

Order codes			
TO-220 (single gauge)	**TO-220 (double gauge)**	**D²PAK (tape and reel)**	**TO-220FP**
LM217T	LM217T-DG	LM217D2T-TR	
LM317T	LM317T-DG	LM317D2T-TR	LM317P
LM317BT			

This is information on a product in full production. www.st.com

Contents

1 Pin configuration 3

2 Maximum ratings 4

3 Diagram 5

4 Electrical characteristics 6

5 Typical characteristics 9

6 Application information 10

7 Package mechanical data 14

8 Packaging mechanical data 22

9 Revision history 24

1 Pin configuration

Figure 1. Pin connections (top view)

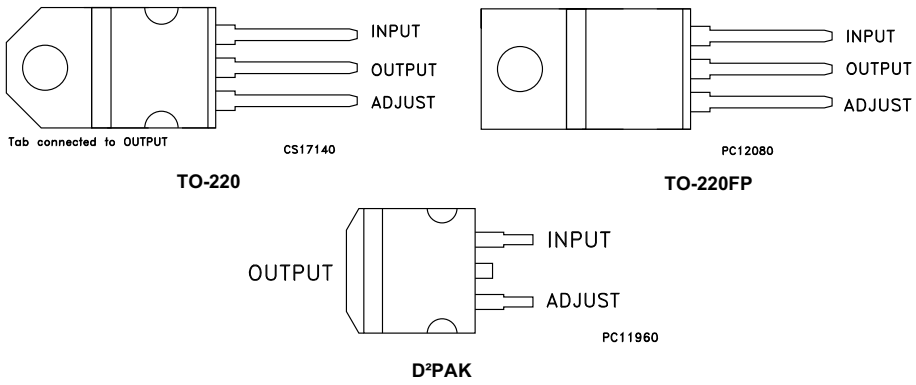

2 Maximum ratings

Table 2. Absolute maximum ratings

Symbol	Parameter		Value	Unit
$V_I - V_O$	Input-reference differential voltage		40	V
I_O	Output current		Internally limited	A
T_{OP}	Operating junction temperature for:	LM217	- 25 to 150	°C
		LM317	0 to 125	
		LM317B	-40 to 125	
P_D	Power dissipation		Internally limited	
T_{STG}	Storage temperature		- 65 to 150	°C

Note: Absolute maximum ratings are those values beyond which damage to the device may occur. Functional operation under these condition is not implied.

Table 3. Thermal data

Symbol	Parameter	D²PAK	TO-220	TO-220FP	Unit
R_{thJC}	Thermal resistance junction-case	3	5	5	°C/W
R_{thJA}	Thermal resistance junction-ambient	62.5	50	60	°C/W

3 Diagram

Figure 2. Schematic diagram

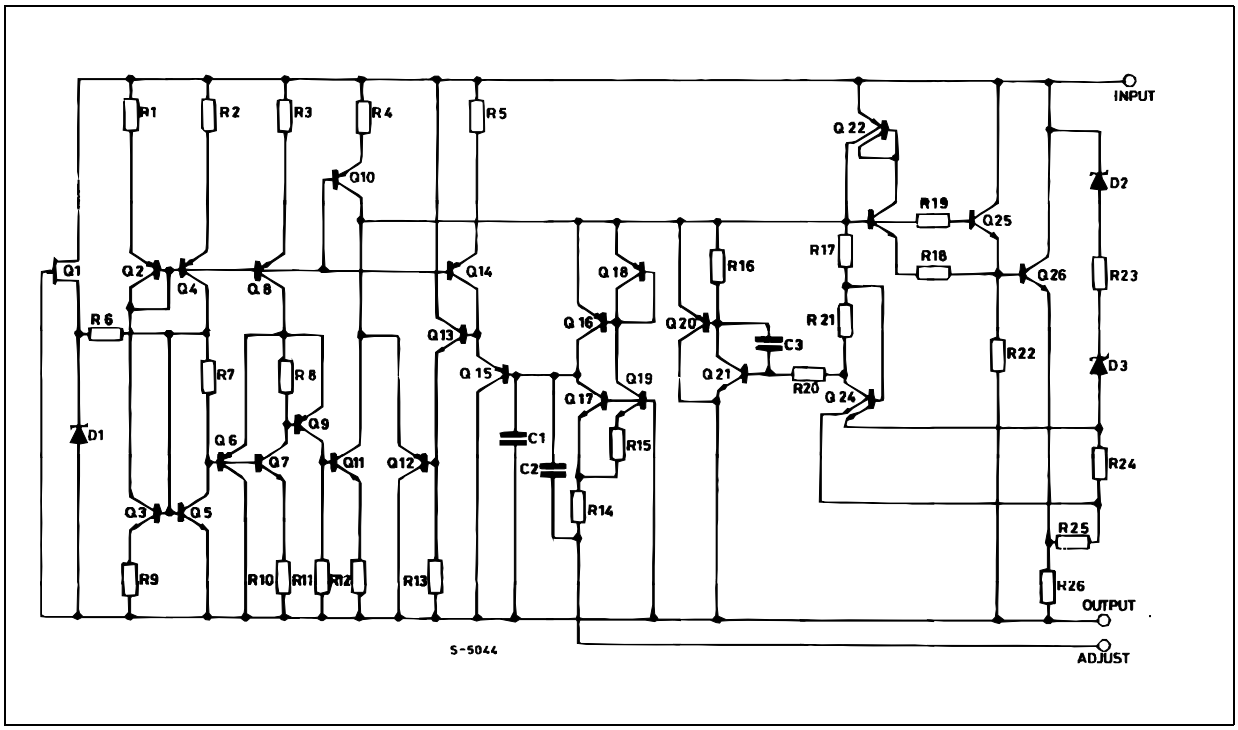

4 Electrical characteristics

V_I - V_O = 5 V, I_O = 500 mA, I_{MAX} = 1.5 A and P_{MAX} = 20 W, T_J = - 55 to 150 °C, unless otherwise specified.

Table 4. Electrical characteristics for LM217

Symbol	Parameter	Test conditions		Min.	Typ.	Max.	Unit
ΔV_O	Line regulation	V_I - V_O = 3 to 40 V	T_J = 25°C		0.01	0.02	%/V
					0.02	0.05	
ΔV_O	Load regulation	$V_O \leq 5$ V I_O = 10 mA to I_{MAX}	T_J = 25°C		5	15	mV
					20	50	
		$V_O \geq 5$ V, I_O = 10 mA to I_{MAX}	T_J = 25°C		0.1	0.3	%
					0.3	1	
I_{ADJ}	Adjustment pin current				50	100	µA
ΔI_{ADJ}	Adjustment pin current	V_I - V_O = 2.5 to 40V I_O = 10 mA to I_{MAX}			0.2	5	µA
V_{REF}	Reference voltage	V_I - V_O = 2.5 to 40V I_O= 10 mA to I_{MAX} $P_D \leq P_{MAX}$		1.2	1.25	1.3	V
$\Delta V_O/V_O$	Output voltage temperature stability				1		%
$I_{O(min)}$	Minimum load current	V_I - V_O = 40 V			3.5	5	mA
$I_{O(max)}$	Maximum load current	V_I - $V_O \leq$ 15 V, $P_D < P_{MAX}$		1.5	2.2		A
		V_I - V_O = 40 V, $P_D < P_{MAX}$, T_J = 25°C			0.4		
eN	Output noise voltage (percentage of V_O)	B = 10Hz to 100kHz, T_J = 25°C			0.003		%
SVR	Supply voltage rejection (1)	T_J = 25°C, f = 120Hz	C_{ADJ}=0		65		dB
			C_{ADJ}=10µF	66	80		

1. C_{ADJ} is connected between adjust pin and ground.

V_I - V_O = 5 V, I_O = 500 mA, I_{MAX} = 1.5 A and P_{MAX} = 20 W, T_J = 0 to 125 °C, unless otherwise specified.

Table 5. Electrical characteristics for LM317

Symbol	Parameter	Test conditions		Min.	Typ.	Max.	Unit
ΔV_O	Line regulation	V_I - V_O = 3 to 40 V	T_J = 25°C		0.01	0.04	%/V
					0.02	0.07	
ΔV_O	Load regulation	$V_O \leq$ 5 V I_O = 10 mA to I_{MAX}	T_J = 25°C		5	25	mV
					20	70	
		$V_O \geq$5 V, I_O = 10 mA to I_{MAX}	T_J = 25°C		0.1	0.5	%
					0.3	1.5	
I_{ADJ}	Adjustment pin current				50	100	µA
ΔI_{ADJ}	Adjustment pin current	V_I - V_O = 2.5 to 40V, I_O = 10 mA to 500mA			0.2	5	µA
V_{REF}	Reference voltage (between pin 3 and pin 1)	V_I - V_O = 2.5 to 40V I_O = 10 mA to 500mA $P_D \leq P_{MAX}$		1.2	1.25	1.3	V
$\Delta V_O/V_O$	Output voltage temperature stability				1		%
$I_{O(min)}$	Minimum load current	V_I - V_O = 40 V			3.5	10	mA
$I_{O(max)}$	Maximum load current	V_I - $V_O \leq$ 15 V, $P_D < P_{MAX}$		1.5	2.2		A
		V_I - V_O = 40 V, $P_D < P_{MAX}$, T_J = 25°C			0.4		
eN	Output noise voltage (percentage of V_O)	B = 10Hz to 100kHz, T_J = 25°C			0.003		%
SVR	Supply voltage rejection (1)	T_J = 25°C, f = 120Hz	C_{ADJ}=0		65		dB
			C_{ADJ}=10µF	66	80		

1. C_{ADJ} is connected between adjust pin and ground.

V_I - V_O = 5 V, I_O = 500 mA, I_{MAX} = 1.5 A and P_{MAX} = 20 W, T_J = - 40 to 125 °C, unless otherwise specified.

Table 6. Electrical characteristics for LM317B

Symbol	Parameter	Test conditions		Min.	Typ.	Max.	Unit
ΔV_O	Line regulation	V_I - V_O = 3 to 40 V	T_J = 25°C		0.01	0.04	%/V
					0.02	0.07	
ΔV_O	Load regulation	$V_O \leq 5$ V I_O = 10 mA to I_{MAX}	T_J = 25°C		5	25	mV
					20	70	
		$V_O \geq 5$ V, I_O = 10 mA to I_{MAX}	T_J = 25°C		0.1	0.5	%
					0.3	1.5	
I_{ADJ}	Adjustment pin current				50	100	µA
ΔI_{ADJ}	Adjustment pin current	V_I - V_O = 2.5 to 40V, I_O = 10 mA to 500mA			0.2	5	µA
V_{REF}	Reference voltage (between pin 3 and pin 1)	V_I - V_O = 2.5 to 40V I_O = 10 mA to 500mA $P_D \leq P_{MAX}$		1.2	1.25	1.3	V
$\Delta V_O/V_O$	Output voltage temperature stability				1		%
$I_{O(min)}$	Minimum load current	V_I - V_O = 40 V			3.5	10	mA
$I_{O(max)}$	Maximum load current	V_I - $V_O \leq 15$ V, $P_D < P_{MAX}$		1.5	2.2		A
		V_I - V_O = 40 V, $P_D < P_{MAX}$, T_J = 25°C			0.4		
eN	Output noise voltage (percentage of V_O)	B = 10Hz to 100kHz, T_J = 25°C			0.003		%
SVR	Supply voltage rejection (1)	T_J = 25°C, f = 120Hz	C_{ADJ}=0		65		dB
			C_{ADJ}=10µF	66	80		

1. C_{ADJ} is connected between adjust pin and ground.

5 Typical characteristics

Figure 3. Output current vs. input-output differential voltage

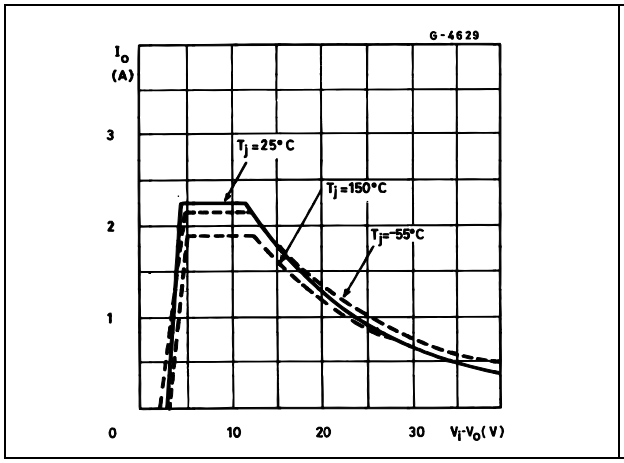

Figure 4. Dropout voltage vs. junction temperature

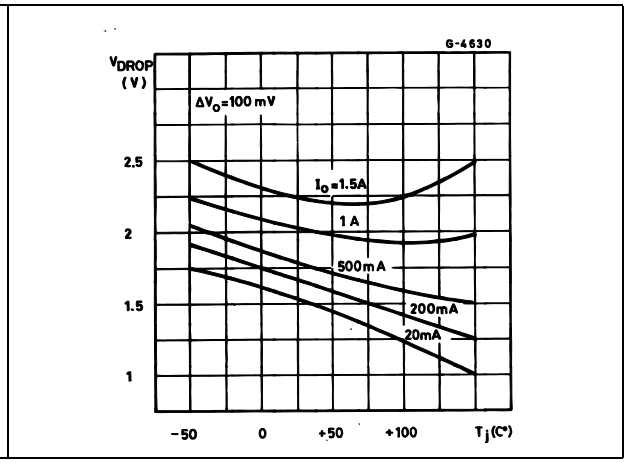

Figure 5. Reference voltage vs. junction

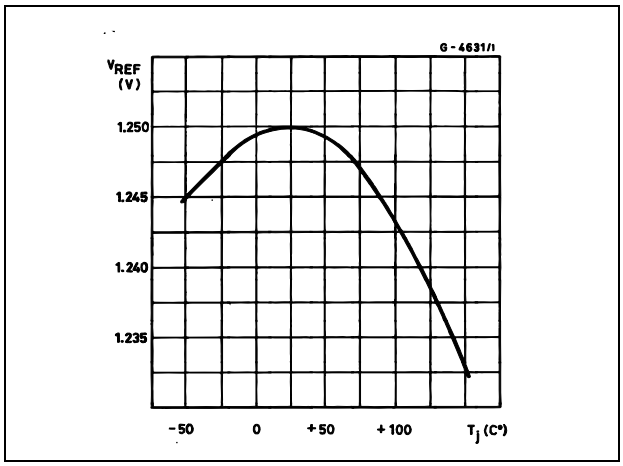

Figure 6. Basic adjustable regulator

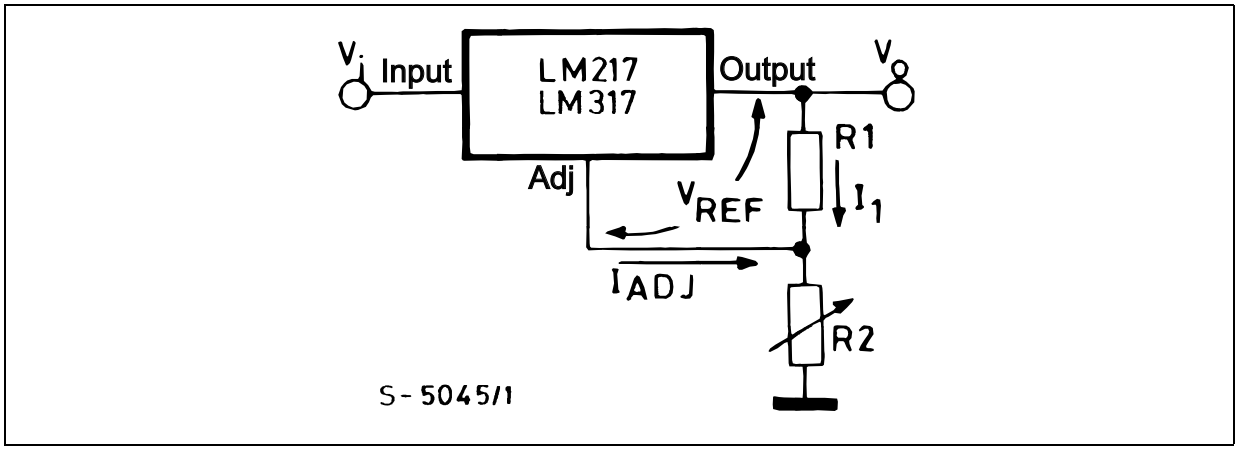

6 Application information

The LM217, LM317 provides an internal reference voltage of 1.25 V between the output and adjustments terminals. This is used to set a constant current flow across an external resistor divider (see *Figure 6*), giving an output voltage V_O of:

$V_O = V_{REF} (1 + R_2/R_1) + I_{ADJ} R_2$

The device was designed to minimize the term I_{ADJ} (100 µA max) and to maintain it very constant with line and load changes. Usually, the error term $I_{ADJ} \times R_2$ can be neglected. To obtain the previous requirement, all the regulator quiescent current is returned to the output terminal, imposing a minimum load current condition. If the load is insufficient, the output voltage will rise. Since the LM217, LM317 is a floating regulator and "sees" only the input-to-output differential voltage, supplies of very high voltage with respect to ground can be regulated as long as the maximum input-to-output differential is not exceeded. Furthermore, programmable regulators are easily obtainable and, by connecting a fixed resistor between the adjustment and output, the device can be used as a precision current regulator. In order to optimize the load regulation, the current set resistor R_1 (see *Figure 6*) should be tied as close as possible to the regulator, while the ground terminal of R_2 should be near the ground of the load to provide remote ground sensing. Performance may be improved with added capacitance as follow:

- An input bypass capacitor of 0.1 µF
- An adjustment terminal to ground 10 µF capacitor to improve the ripple rejection of about 15 dB (C_{ADJ}).
- An 1 µF tantalum (or 25 µF Aluminium electrolytic) capacitor on the output to improve transient response. In addition to external capacitors, it is good practice to add protection diodes, as shown in *Figure 7* D1 protect the device against input short circuit, while D2 protect against output short circuit for capacitance discharging.

Figure 7. Voltage regulator with protection diodes

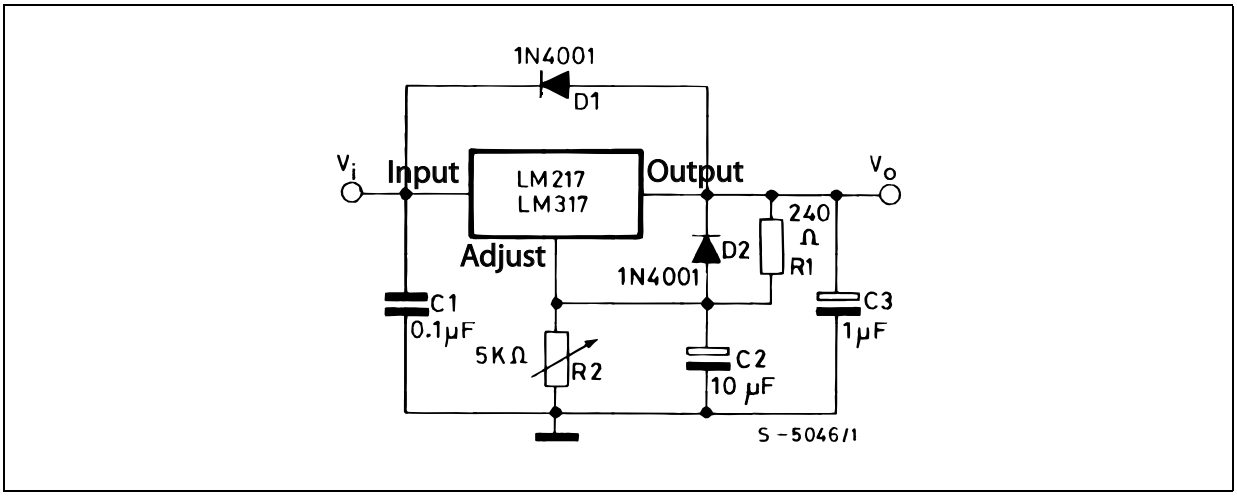

Note: D1 protect the device against input short circuit, while D2 protects against output short circuit for capacitors discharging.

Figure 8. Slow turn-on 15 V regulator

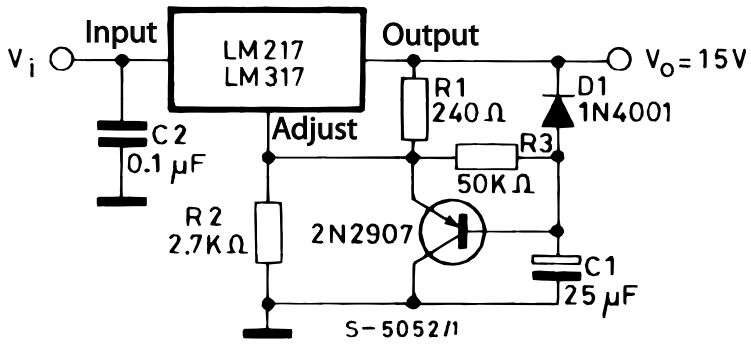

Figure 9. Current regulator

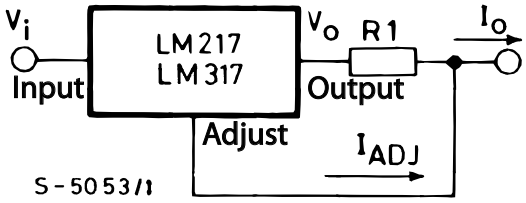

$I_O = (V_{REF} / R_1) + I_{ADJ} = 1.25\ V / R_1$

Figure 10. 5 V electronic shut-down regulator

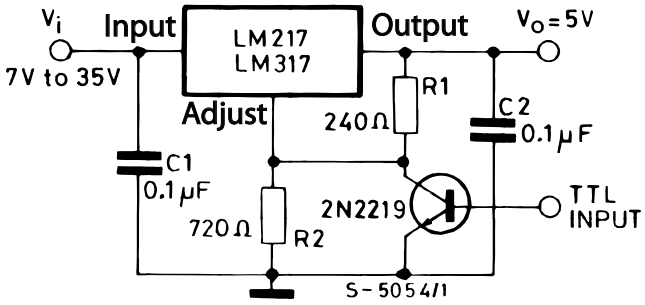

Figure 11. Digitally selected outputs

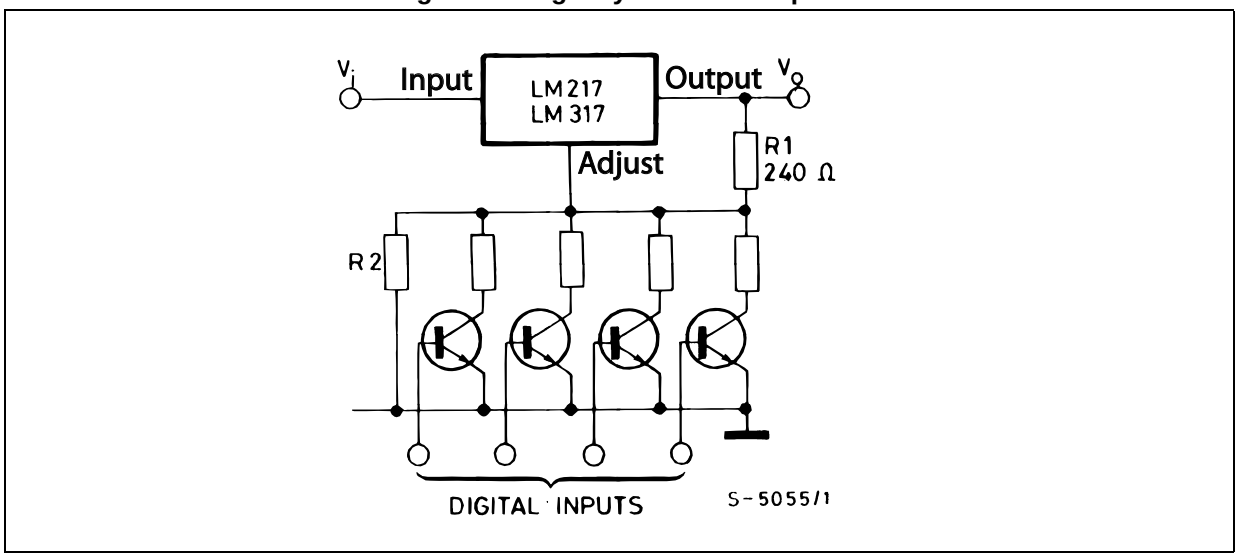

(R_2 sets maximum V_O)

Figure 12. Battery charger (12 V)

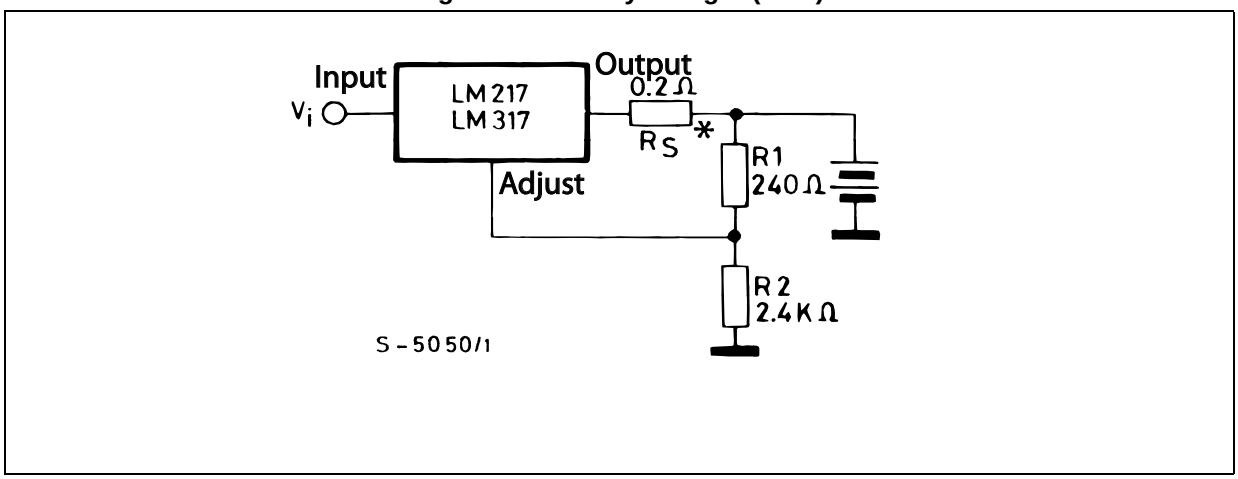

* R_S sets output impedance of charger $Z_O = R_S (1 + R_2/R_1)$. Use of R_S allows low charging rates whit fully charged battery.

Figure 13. Current limited 6 V charger

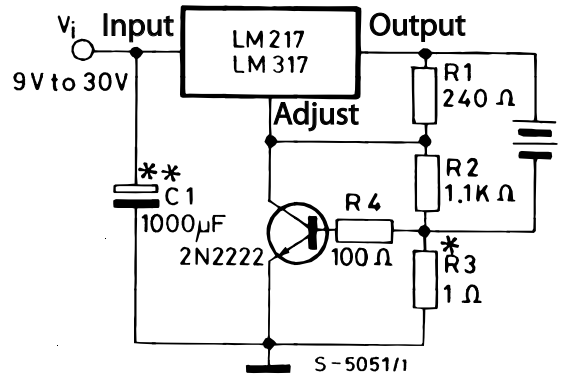

* R3 sets peak current (0.6 A for 1 0).

** C1 recommended to filter out input transients.

7 Package mechanical data

In order to meet environmental requirements, ST offers these devices in different grades of ECOPACK® packages, depending on their level of environmental compliance. ECOPACK® specifications, grade definitions and product status are available at: *www.st.com*. ECOPACK® is an ST trademark.

Figure 14. TO-220 (single gauge) drawing

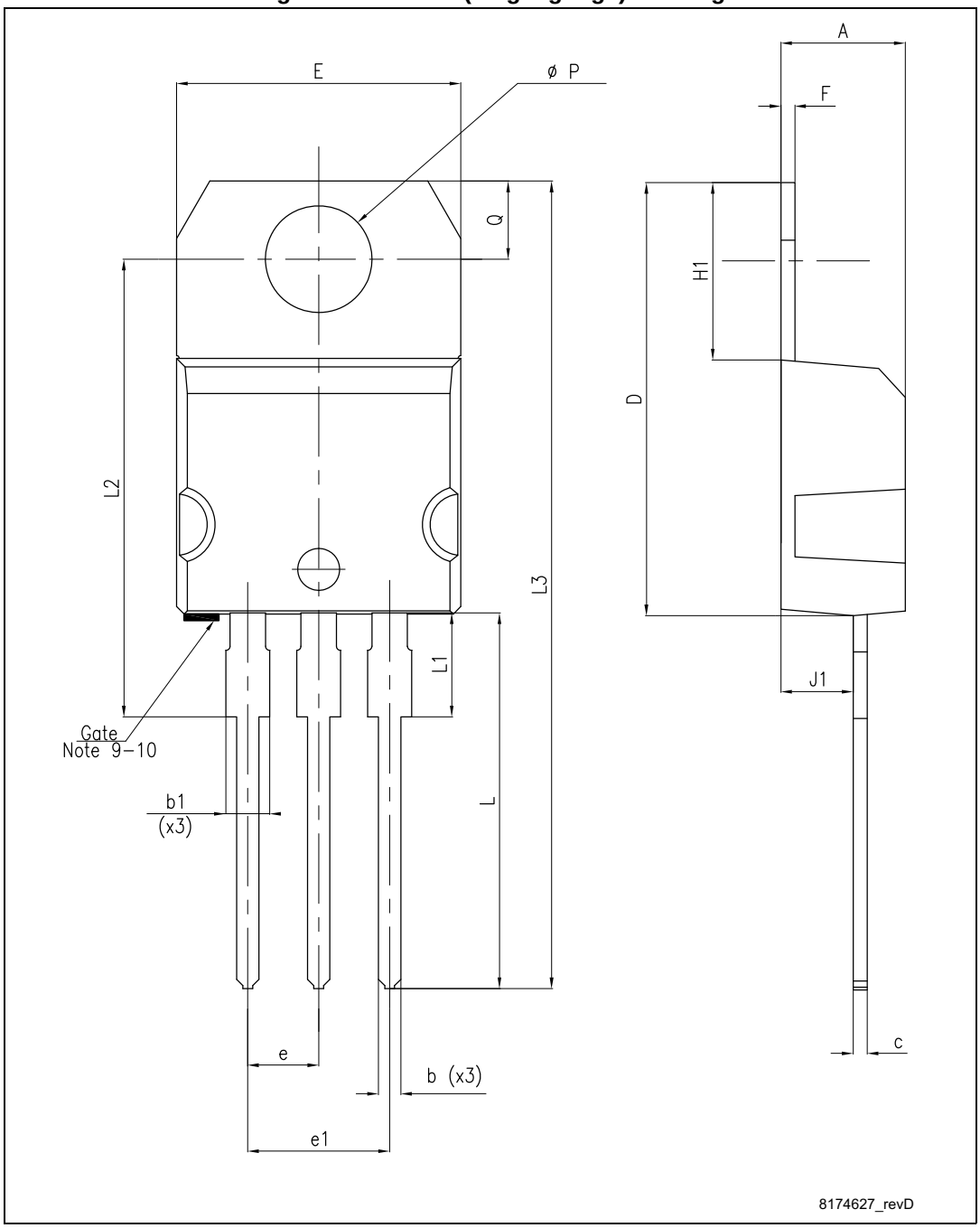

Table 7. TO-220 (single gauge) mechanical data

Dim.	mm		
	Min.	Typ.	Max.
A	4.40		4.60
b	0.61		0.88
b1	1.14		1.70
c	0.48		0.70
D	15.25		15.75
E	10		10.40
e	2.40		2.70
e1	4.95		5.15
F	0.51		0.60
H1	6.20		6.60
J1	2.40		2.72
L	13		14
L1	3.50		3.93
L20		16.40	
L30		28.90	
∅P	3.75		3.85
Q	2.65		2.95

Figure 15. TO-220 (dual gauge) drawing

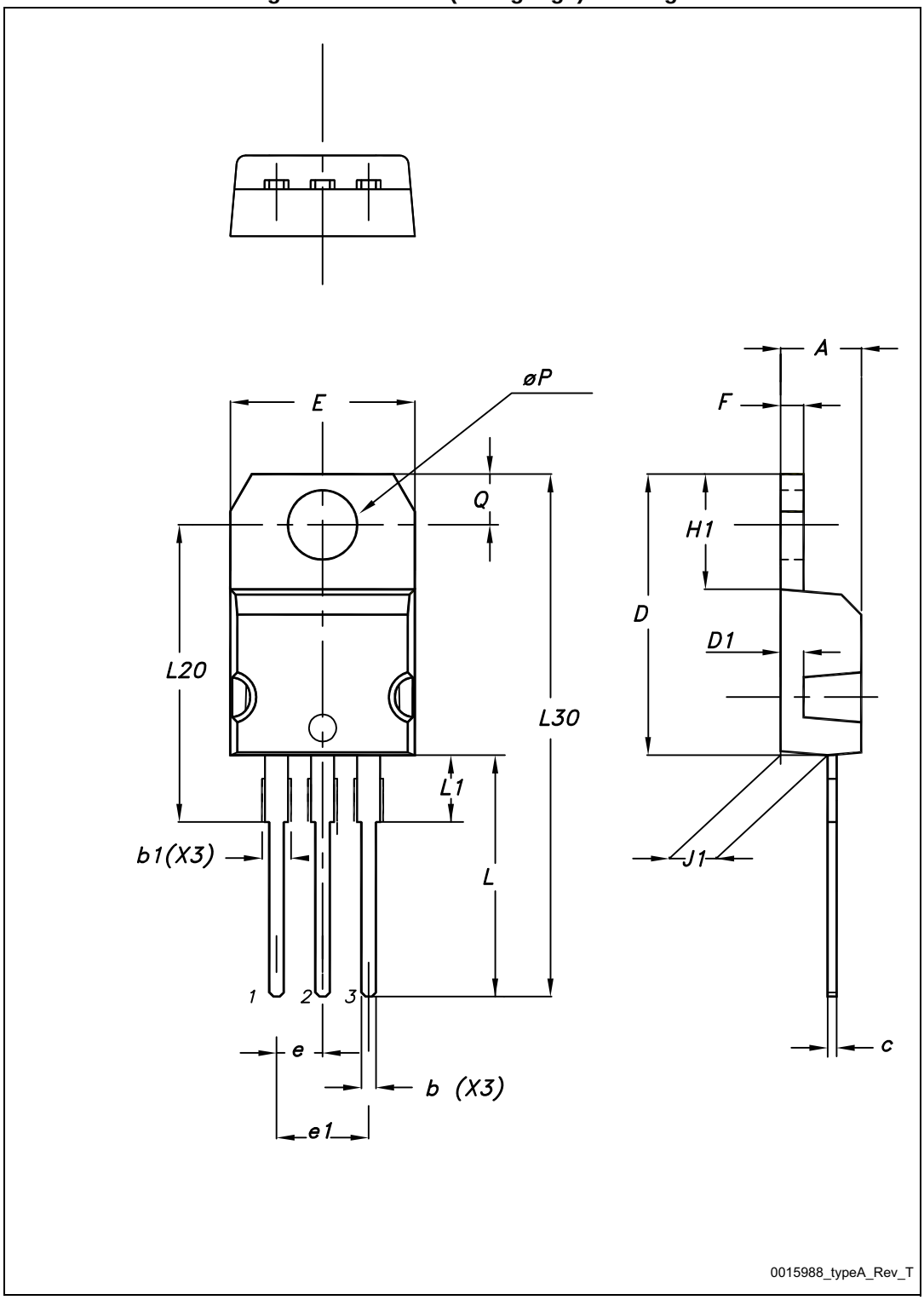

Table 8. TO-220 (dual gauge) mechanical data

Dim.	mm		
	Min.	Typ.	Max.
A	4.40		4.60
b	0.61		0.88
b1	1.14		1.70
c	0.48		0.70
D	15.25		15.75
D1		1.27	
E	10		10.40
e	2.40		2.70
e1	4.95		5.15
F	1.23		1.32
H1	6.20		6.60
J1	2.40		2.72
L	13		14
L1	3.50		3.93
L20		16.40	
L30		28.90	
∅P	3.75		3.85
Q	2.65		2.95

Figure 16. TO-220FP drawing

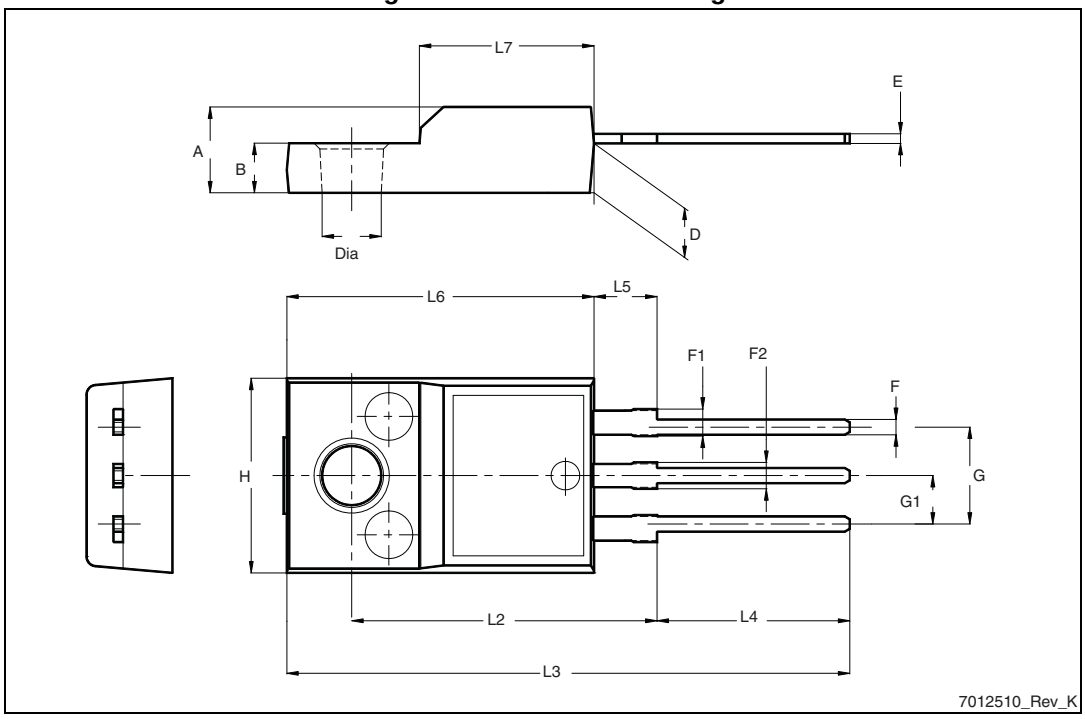

Table 9. TO-220FP mechanical data

Dim.	mm		
	Min.	Typ.	Max.
A	4.4		4.6
B	2.5		2.7
D	2.5		2.75
E	0.45		0.7
F	0.75		1
F1	1.15		1.70
F2	1.15		1.70
G	4.95		5.2
G1	2.4		2.7
H	10		10.4
L2		16	
L3	28.6		30.6
L4	9.8		10.6
L5	2.9		3.6
L6	15.9		16.4
L7	9		9.3
Dia	3		3.2

Figure 17. D²PAK drawing

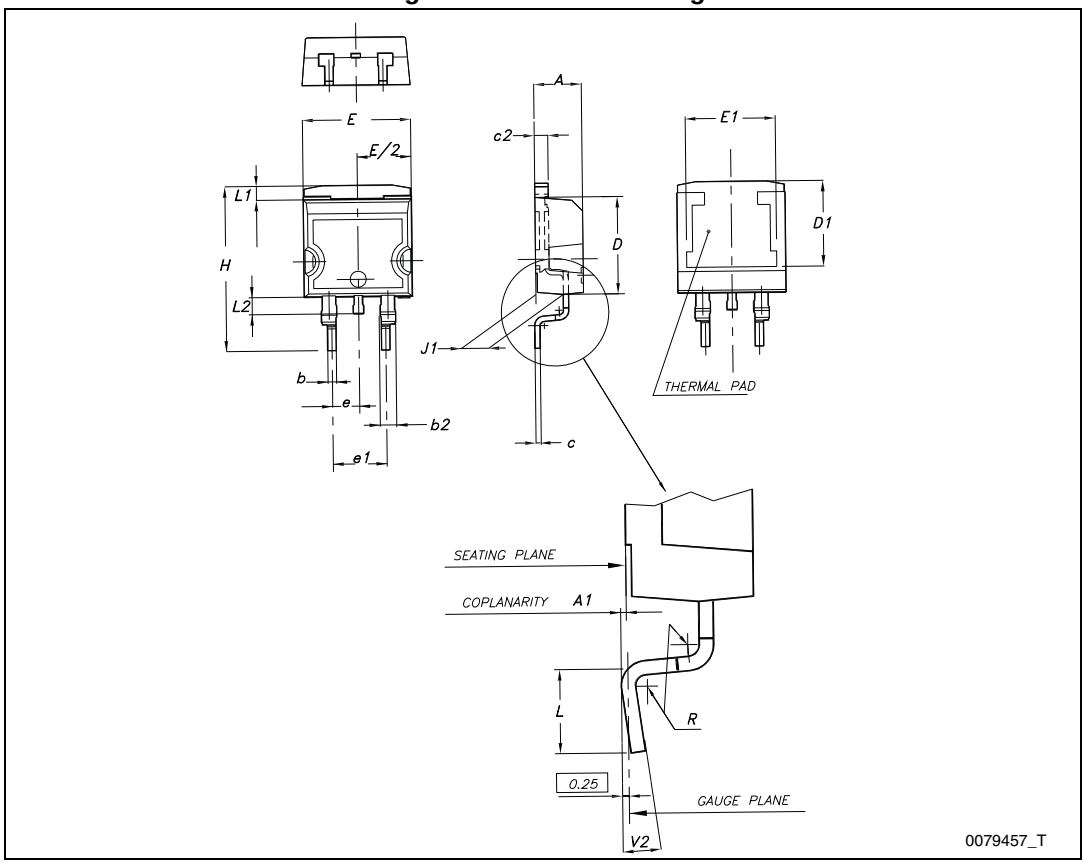

Table 10. D²PAK mechanical data

Dim.	mm		
	Min.	Typ.	Max.
A	4.40		4.60
A1	0.03		0.23
b	0.70		0.93
b2	1.14		1.70
c	0.45		0.60
c2	1.23		1.36
D	8.95		9.35
D1	7.50		
E	10		10.40
E1	8.50		
e		2.54	
e1	4.88		5.28
H	15		15.85
J1	2.49		2.69
L	2.29		2.79
L1	1.27		1.40
L2	1.30		1.75
R		0.4	
V2	0°		8°

8 Packaging mechanical data

Figure 18. Tape for D²PAK

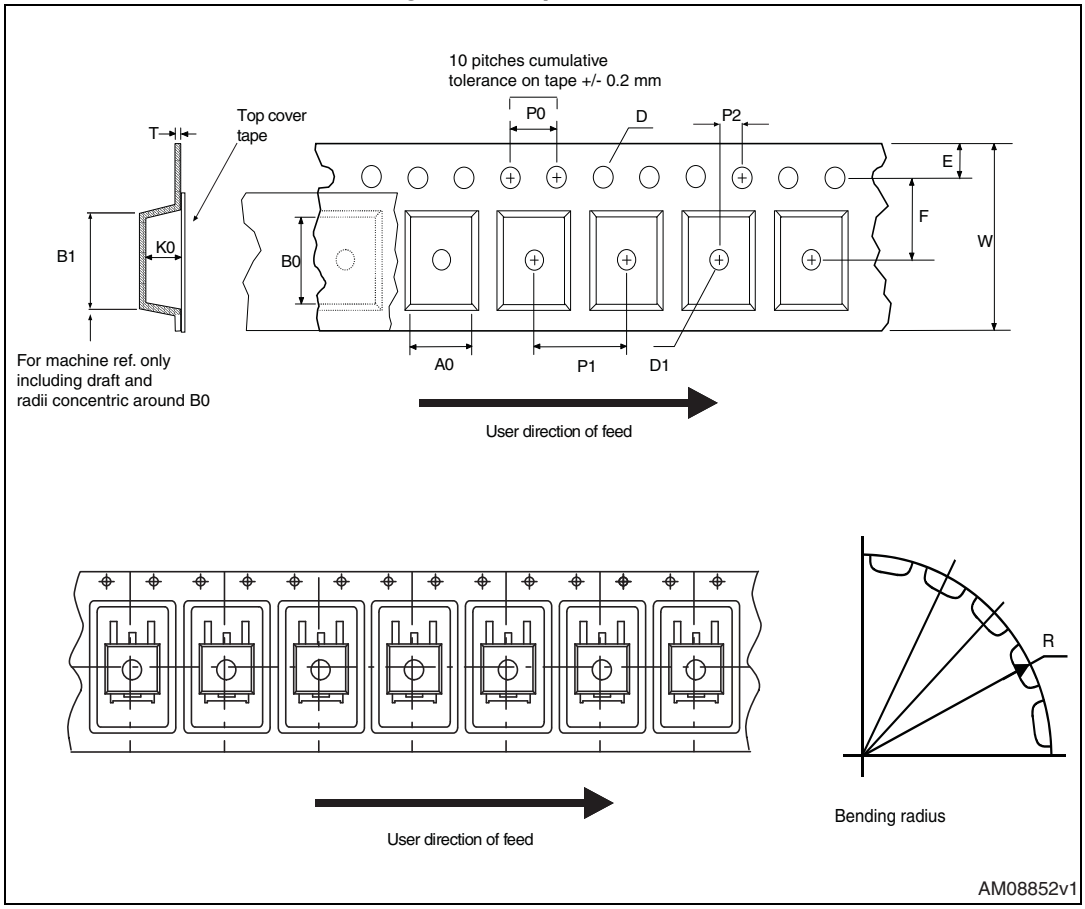

Figure 19. Reel for D²PAK

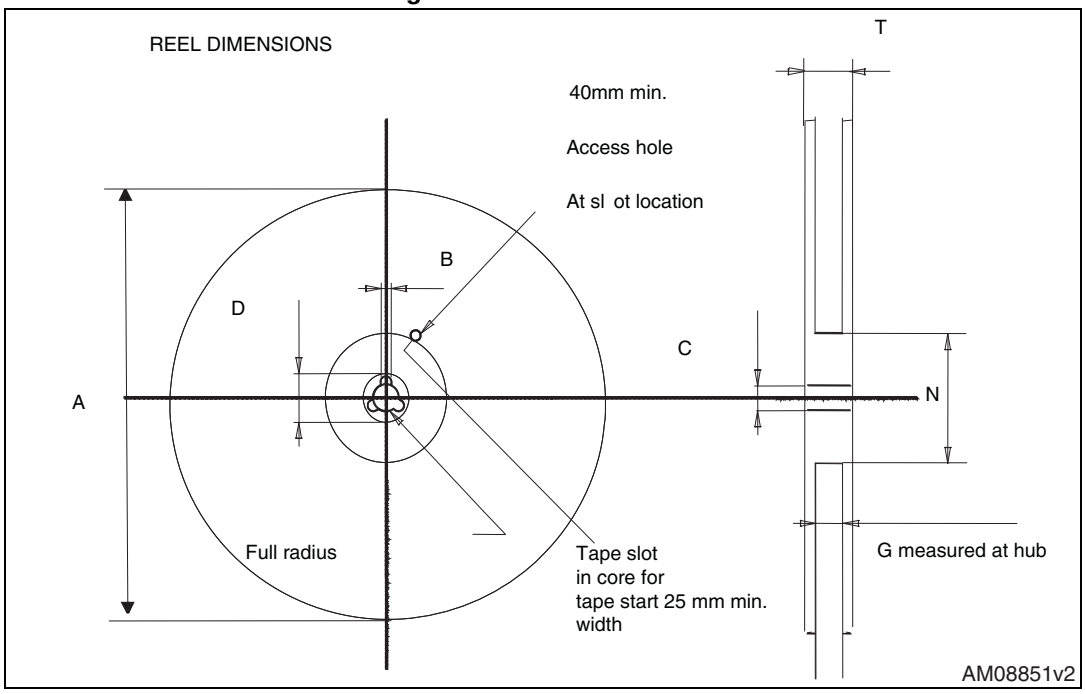

Table 11. D²PAK tape and reel mechanical data

Tape			Reel		
Dim.	mm		Dim.	mm	
	Min.	Max.		Min.	Max.
A0	10.5	10.7	A		330
B0	15.7	15.9	B	1.5	
D	1.5	1.6	C	12.8	13.2
D1	1.59	1.61	D	20.2	
E	1.65	1.85	G	24.4	26.4
F	11.4	11.6	N	100	
K0	4.8	5.0	T		30.4
P0	3.9	4.1			
P1	11.9	12.1	Base qty		1000
P2	1.9	2.1	Bulk qty		1000
R	50				
T	0.25	0.35			
W	23.7	24.3			

9 Revision history

Table 12. Document revision history

Date	Revision	Changes
01-Sep-2004	10	Mistake V_{REF} ==> V_O, tables 1, 4 and 5.
19-Jan-2007	11	D²PAK mechanical data has been updated, add footprint data and the document has been reformatted.
13-Jun-2007	12	Change values ΔI_{ADJ} and V_{REF} test condition of I_O = 10 mA to I_{MAX} ==> I_O = 10 mA to 500 mA on *Table 5*.
23-Nov-2007	13	Added *Table 1*.
06-Feb-2008	14	Added: TO-220 mechanical data *Figure 14 on page 14* and *Table 6 on page 13*.
02-Mar-2010	15	Added: notes *Figure 14 on page 14*, *Figure 15 on page 15*, *Figure 16* and *Figure 17 on page 16*.
17-Nov-2010	16	Modified: R_{thJC} value for TO-220 *Table 3 on page 4*.
18-Nov-2011	17	Added: order code LM317T-DG *Table 1 on page 1*.
13-Feb-2012	18	Added: order code LM217T-DG *Table 1 on page 1*.
12-Mar-2014	19	The part number LM117 has been moved to a separate datasheet. Removed TO-3 package. Updated the description in cover page Modified *Table 1: Device summary*, *Table 3: Thermal data*, *Figure 1: Pin connections (top view)*, *Section 4: Electrical characteristics*, *Section 5: Typical characteristics*, *Section 6: Application information*, *Section 7: Package mechanical data*. Added *Section 8: Packaging mechanical data*. Minor text changes.

Please Read Carefully:

Information in this document is provided solely in connection with ST products. STMicroelectronics NV and its subsidiaries (“ST”) reserve the right to make changes, corrections, modifications or improvements, to this document, and the products and services described herein at any time, without notice.

All ST products are sold pursuant to ST’s terms and conditions of sale.

Purchasers are solely responsible for the choice, selection and use of the ST products and services described herein, and ST assumes no liability whatsoever relating to the choice, selection or use of the ST products and services described herein.

No license, express or implied, by estoppel or otherwise, to any intellectual property rights is granted under this document. If any part of this document refers to any third party products or services it shall not be deemed a license grant by ST for the use of such third party products or services, or any intellectual property contained therein or considered as a warranty covering the use in any manner whatsoever of such third party products or services or any intellectual property contained therein.

UNLESS OTHERWISE SET FORTH IN ST’S TERMS AND CONDITIONS OF SALE ST DISCLAIMS ANY EXPRESS OR IMPLIED WARRANTY WITH RESPECT TO THE USE AND/OR SALE OF ST PRODUCTS INCLUDING WITHOUT LIMITATION IMPLIED WARRANTIES OF MERCHANTABILITY, FITNESS FOR A PARTICULAR PURPOSE (AND THEIR EQUIVALENTS UNDER THE LAWS OF ANY JURISDICTION), OR INFRINGEMENT OF ANY PATENT, COPYRIGHT OR OTHER INTELLECTUAL PROPERTY RIGHT.

ST PRODUCTS ARE NOT DESIGNED OR AUTHORIZED FOR USE IN: (A) SAFETY CRITICAL APPLICATIONS SUCH AS LIFE SUPPORTING, ACTIVE IMPLANTED DEVICES OR SYSTEMS WITH PRODUCT FUNCTIONAL SAFETY REQUIREMENTS; (B) AERONAUTIC APPLICATIONS; (C) AUTOMOTIVE APPLICATIONS OR ENVIRONMENTS, AND/OR (D) AEROSPACE APPLICATIONS OR ENVIRONMENTS. WHERE ST PRODUCTS ARE NOT DESIGNED FOR SUCH USE, THE PURCHASER SHALL USE PRODUCTS AT PURCHASER’S SOLE RISK, EVEN IF ST HAS BEEN INFORMED IN WRITING OF SUCH USAGE, UNLESS A PRODUCT IS EXPRESSLY DESIGNATED BY ST AS BEING INTENDED FOR “AUTOMOTIVE, AUTOMOTIVE SAFETY OR MEDICAL” INDUSTRY DOMAINS ACCORDING TO ST PRODUCT DESIGN SPECIFICATIONS. PRODUCTS FORMALLY ESCC, QML OR JAN QUALIFIED ARE DEEMED SUITABLE FOR USE IN AEROSPACE BY THE CORRESPONDING GOVERNMENTAL AGENCY.

Resale of ST products with provisions different from the statements and/or technical features set forth in this document shall immediately void any warranty granted by ST for the ST product or service described herein and shall not create or extend in any manner whatsoever, any liability of ST.

ST and the ST logo are trademarks or registered trademarks of ST in various countries.
Information in this document supersedes and replaces all information previously supplied.
The ST logo is a registered trademark of STMicroelectronics. All other names are the property of their respective owners.

© 2014 STMicroelectronics - All rights reserved

STMicroelectronics group of companies

Australia - Belgium - Brazil - Canada - China - Czech Republic - Finland - France - Germany - Hong Kong - India - Israel - Italy - Japan - Malaysia - Malta - Morocco - Philippines - Singapore - Spain - Sweden - Switzerland - United Kingdom - United States of America

www.st.com