High Speed PWM Controller

FEATURES

- Compatible with Voltage or Current Mode Topologies
- Practical Operation Switching Frequencies to 1MHz
- 50ns Propagation Delay to Output
- High Current Dual Totem Pole Outputs (1.5A Peak)
- Wide Bandwidth Error Amplifier
- Fully Latched Logic with Double Pulse Suppression
- Pulse-by-Pulse Current Limiting
- Soft Start / Max. Duty Cycle Control
- Under-Voltage Lockout with Hysteresis
- Low Start Up Current (1.1mA)

DESCRIPTION

The UC1825 family of PWM control ICs is optimized for high frequency switched mode power supply applications. Particular care was given to minimizing propagation delays through the comparators and logic circuitry while maximizing bandwidth and slew rate of the error amplifier. This controller is designed for use in either current-mode or voltage mode systems with the capability for input voltage feed-forward.

Protection circuitry includes a current limit comparator with a 1V threshold, a TTL compatible shutdown port, and a soft start pin which will double as a maximum duty cycle clamp. The logic is fully latched to provide jitter free operation and prohibit multiple pulses at an output. An under-voltage lockout section with 800mV of hysteresis assures low start up current. During under-voltage lockout, the outputs are high impedance.

These devices feature totem pole outputs designed to source and sink high peak currents from capacitive loads, such as the gate of a power MOSFET. The on state is designed as a high level.

Searchdatasheet.com

BLOCK DIAGRAM

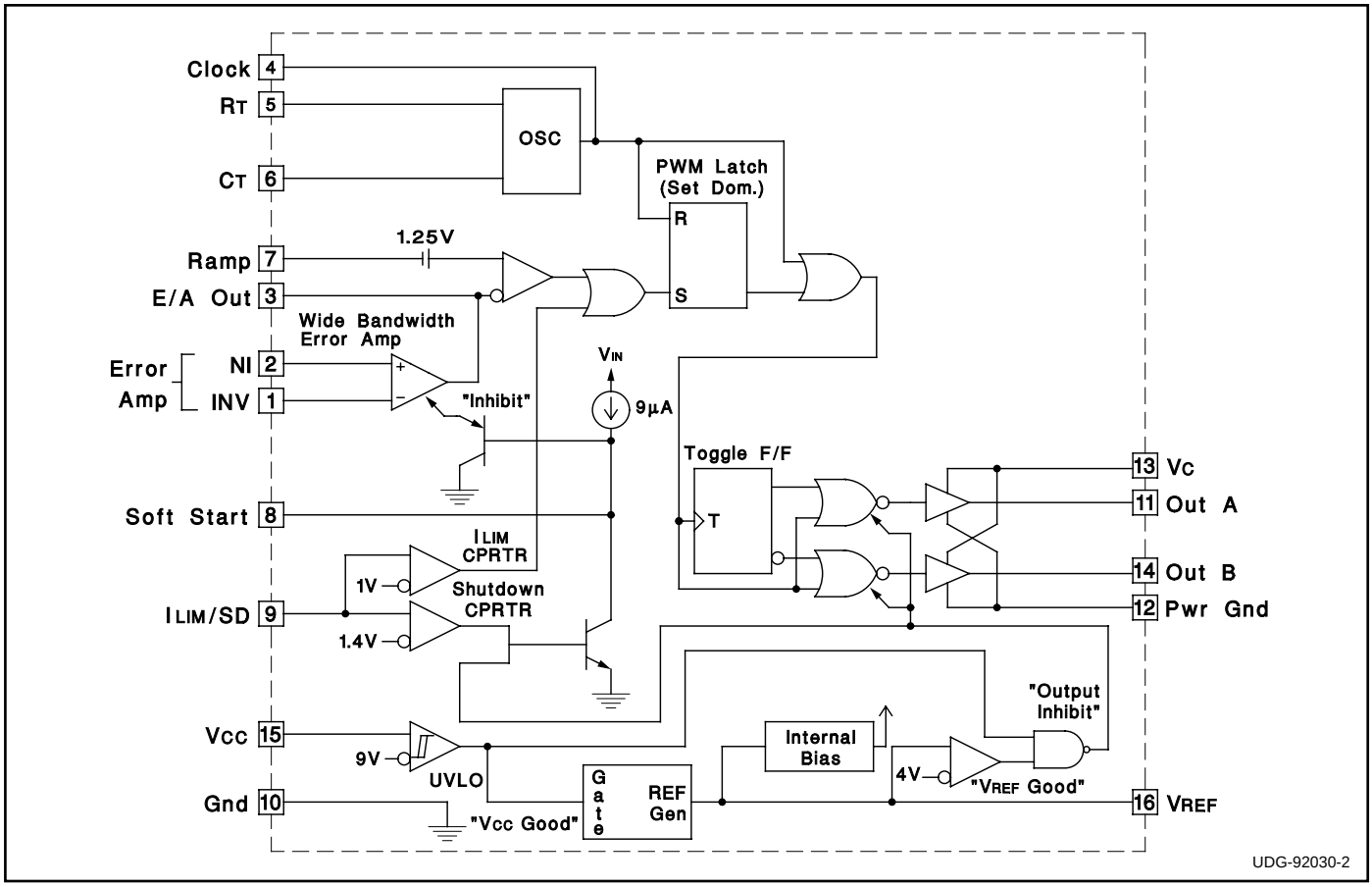

ABSOLUTE MAXIMUM RATINGS (Note 1)

Supply Voltage (Pins 13, 15) 30V
Output Current, Source or Sink (Pins 11, 14)
DC 0.5A
Pulse (0.5 s) 2.0A
Analog Inputs
(Pins 1, 2, 7). . . . . -0.3V to 7V
(Pin 8, 9) . . . . . -0.3V to 6V
Clock Output Current (Pin 4) . . . . . -5mA
Error Amplifier Output Current (Pin 3) 5mA
Soft Start Sink Current (Pin 8) 20mA
Oscillator Charging Current (Pin 5) . . . . . -5mA
Power Dissipation 1W
Storage Temperature Range . . . . . -65°C to +150°C
Lead Temperature (Soldering, 10 seconds) . . . . . 300°C

Note 1: All voltages are with respect to GND (Pin 10); all currents are positive into, negative out of part; pin numbers refer to DIL-16 package.

Note 3: Consult Unitrode Integrated Circuit Databook for thermal limitations and considerations of package.

SOIC-16 (Top View)
DW Package

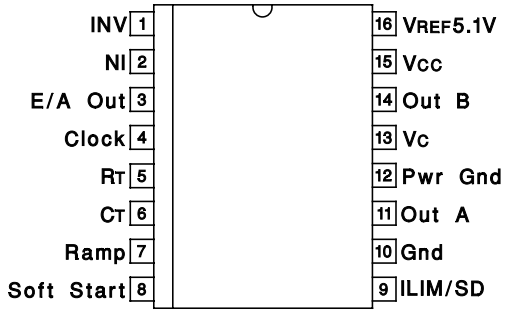

CONNECTION DIAGRAMS

DIL-16 (Top View)
J or N Package

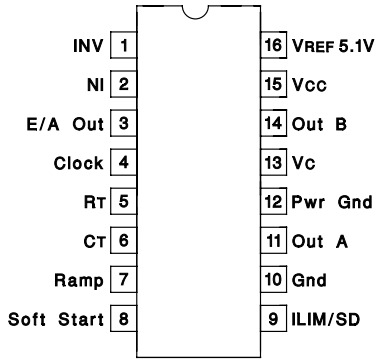

PLCC-20 & LCC-20
(Top View)
Q & L Packages

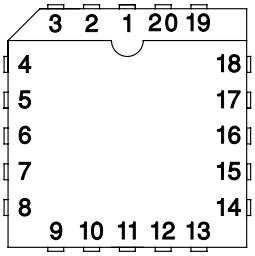

PACKAGE PIN FUNCTION	
FUNCTION	PIN
N/C	1
INV	2
NI	3
E/A Out	4
Clock	5
N/C	6
RT	7
CT	8
Ramp	9
Soft Start	10
N/C	11
ILIM/SD	12
Gnd	13
Out A	14
Pwr Gnd	15
N/C	16
VC	17
Out B	18
VCC	19
VREF 5.1V	20

THERMAL RATINGS TABLE

Package	Θ_{JA}	Θ_{JC}
DIL-16J	80-120	28(2)
DIL-16N	90(1)	45
PLCC-20	43-75(1)	34
LCC-20	70-80	20(2)
SOIC-16	50-120(1)	35

(1) Specified Θ_{JA} (junction to ambient) is for devices mounted to 5in^2 FR4 PC board with one ounce copper where noted. When resistance range is given, lower values are for 5in^2 aluminum PC board. Test PWB was 0.062in thick and typically used 0.635mm trace widths for power packages and 1.3mm trace widths for non-power packages with 100 x 100 mil probe land area at the end of each trace.

(2) Θ_{JC} data values stated were derived from MIL-STD-1835B. MIL-STD-1835B states that the baseline values shown are worst case (mean +2s) for a 60 x 60mil microcircuit device silicon die and applicable for devices with die sizes up to 14400 square mils. For device die sizes greater than 14400 square mils use the following values; dual-in-line, 11°C/W; flat pack 10°C/W; pin grid array, 10°C/W.

ELECTRICAL CHARACTERISTICS: Unless otherwise stated, these specifications apply for , R_T = 3.65k, C_T = 1nF, V_{CC} = 15V, -55°C<T_A<125°C for the UC1825, –40°C<T_A<85°C for the UC2825, and 0°C<T_A<70°C for the UC3825, T_A=T_O.

PARAMETERS	TEST CONDITIONS	UC1825 UC2825			UC3825			
		MIN	TOP	MAX	MIN	TOP	MAX	UNITS
Reference Section								
Output Voltage	T_O = 25°C, I_O = 1mA	5.05	5.10	5.15	5.00	5.10	5.20	V
Line Regulation	10V < V_{CC} < 30V		2	20		2	20	mV
Load Regulation	1mA < I_O < 10mA		5	20		5	20	mV
Temperature Stability*	T_{MIN} < T_A < T_{MAX}		0.2	0.4		0.2	0.4	mV/°C
Total Output Variation*	Line, Load, Temperature	5.00		5.20	4.95		5.25	V
Output Noise Voltage*	10Hz < f < 10kHz		50			50		µV
Long Term Stability*	T_J = 125°C, 1000hrs.		5	25		5	25	mV
Short Circuit Current	V_{REF} = 0V	-15	-50	-100	-15	-50	-100	mA
Oscillator Section								
Initial Accuracy*	T_J = 2°C	360	400	440	360	400	440	kHz
Voltage Stability*	10V < V_{CC} < 30V		0.2	2		0.2	2	%
Temperature Stability*	T_{MIN} < T_A < T_{MAX}		5			5		%
Total Variation*	Line, Temperature	340		460	340		460	kHz
Oscillator Section (cont.)								
Clock Out High		3.9	4.5		3.9	4.5		V
Clock Out Low			2.3	2.9		2.3	2.9	V
Ramp Peak*		2.6	2.8	3.0	2.6	2.8	3.0	V
Ramp Valley*		0.7	1.0	1.25	0.7	1.0	1.25	V
Ramp Valley to Peak*		1.6	1.8	2.0	1.6	1.8	2.0	V
Error Amplifier Section								
Input Offset Voltage				10			15	mV
Input Bias Current			0.6	3		0.6	3	µA
Input Offset Current			0.1	1		0.1	1	µA
Open Loop Gain	1V < V_O < 4V	60	95		60	95		dB
CMRR	1.5V < V_{CM} < 5.5V	75	95		75	95		dB
PSRR	10V < V_{CC} < 30V	85	110		85	110		dB
Output Sink Current	$V_{PIN\ 3}$ = 1V	1	2.5		1	2.5		mA
Output Source Current	$V_{PIN\ 3}$ = 4V	-0.5	-1.3		-0.5	-1.3		mA
Output High Voltage	$I_{PIN\ 3}$ = -0.5mA	4.0	4.7	5.0	4.0	4.7	5.0	V
Output Low Voltage	$I_{PIN\ 3}$ = 1mA	0	0 .5	1.0	0	0.5	1.0	V
Unity Gain Bandwidth*		3	5.5		3	5.5		MHz
Slew Rate*		6	12		6	12		V/µs

ELECTRICAL CHARACTERISTICS: Unless otherwise stated, these specifications apply for , R_T = 3.65k, C_T = 1nF, V_{CC} = 15V, -55°C<T_A<125°C for the UC1825, –40°C<T_A<85°C for the UC2825, and 0°C<T_A<70°C for the UC3825, T_A=T_J.

PARAMETERS	TEST CONDITIONS	UC1825 UC2825			UC3825			
		MIN	TOP	MAX	MIN	TOP	MAX	UNITS
PWM Comparator Section								
Pin 7 Bias Current	$V_{PIN\ 7}$ = 0V		-1	-5		-1	-5	µA
Duty Cycle Range		0		80	0		85	%
Pin 3 Zero DC Threshold	$V_{PIN\ 7}$ = 0V	1.1	1.25		1.1	1.25		V
Delay to Output*			50	80		50	80	ns
Soft-Start Section								
Charge Current	$V_{PIN\ 8}$ = 0.5V	3	9	20	3	9	20	µA
Discharge Current	$V_{PIN\ 8}$ = 1V	1			1			mA
Current Limit / Shutdown Section								
Pin 9 Bias Current	0 < $V_{PIN\ 9}$ < 4V			15			10	µA
Current Limit Threshold		0.9	1.0	1.1	0.9	1.0	1.1	V
Shutdown Threshold		1.25	1.40	1.55	1.25	1.40	1.55	V
Delay to Output			50	80		50	80	ns
Output Section								
Output Low Level	I_{OUT} = 20mA		0.25	0.40		0.25	0.40	V
	I_{OUT} = 200mA		1.2	2.2		1.2	2.2	V
Output High Level	I_{OUT} = -20mA	13.0	13.5		13.0	13.5		V
	I_{OUT} = -200mA	12.0	13.0		12.0	13.0		V
Collector Leakage	V_C = 30V		100	500		10	500	µA
Rise/Fall Time*	CL = 1nF		30	60		30	60	ns
Under-Voltage Lockout Section								
Start Threshold		8.8	9.2	9.6	8.8	9.2	9.6	V
UVLO Hysteresis		0.4	0.8	1.2	0.4	0.8	1.2	V
Supply Current Section								
Start Up Current	V_{CC} = 8V		1.1	2.5		1.1	2.5	mA
ICC	$V_{PIN\ 1}$, $V_{PIN\ 7}$, $V_{PIN\ 9}$ = 0V; $V_{PIN\ 2}$ = 1V		22	33		22	33	mA

* This parameter not 100% tested in production but guaranteed by design.

Printed Circuit Board Layout Considerations

High speed circuits demand careful attention to layout and component placement. To assure proper performance of the UC1825 follow these rules: 1) Use a ground plane. 2) Damp or clamp parasitic inductive kick energy from the gate of driven MOSFETs. Do not allow the output pins to ring below ground. A series gate resistor or a shunt 1 Amp Schottky diode at the output pin will serve this purpose. 3) Bypass V_{CC}, V_C, and V_{REF}. Use 0.1µF monolithic ceramic capacitors with low equivalent series inductance. Allow less than 1 cm of total lead length for each capacitor between the bypassed pin and the ground plane. 4) Treat the timing capacitor, CT, like a bypass capacitor.

Error Amplifier Circuit

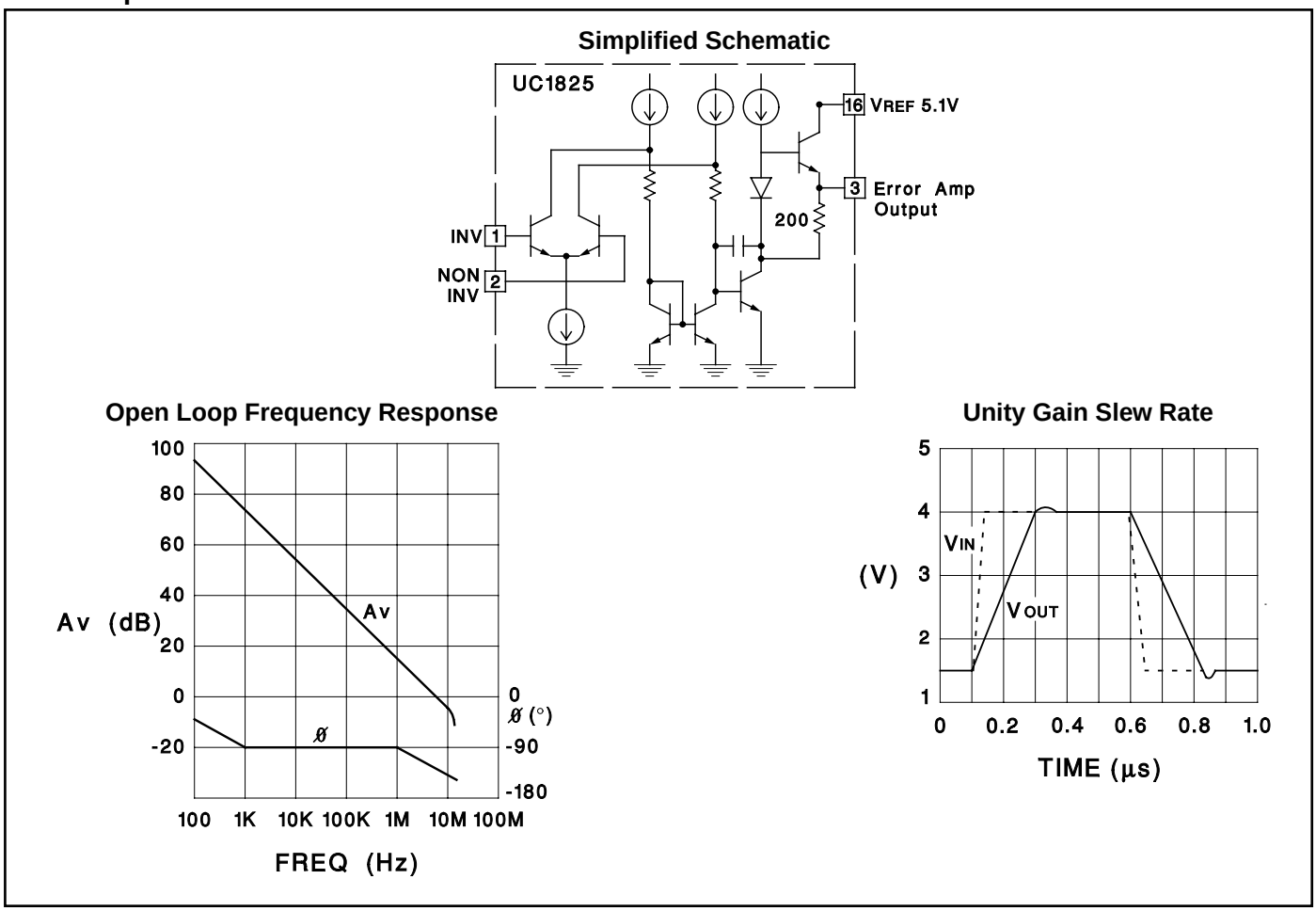

PWM Applications

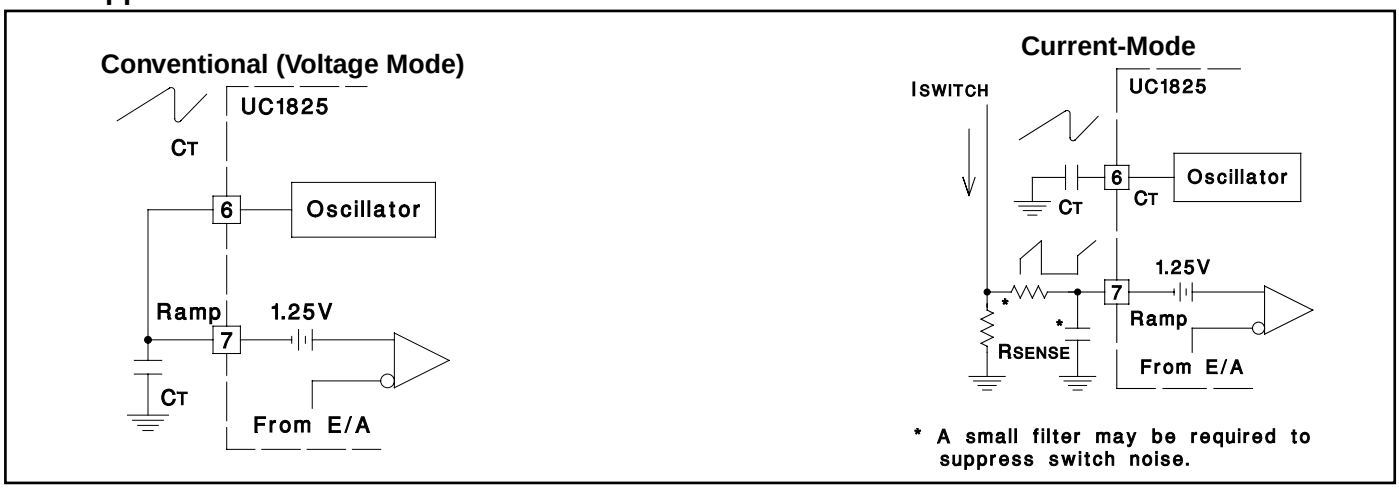

Oscillator Circuit

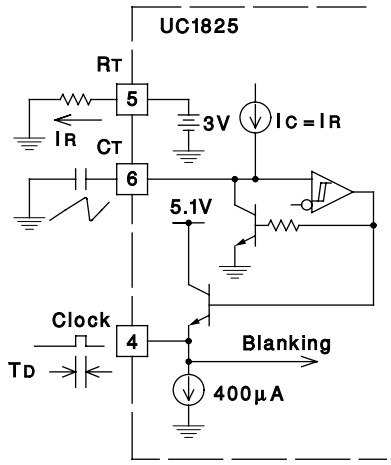

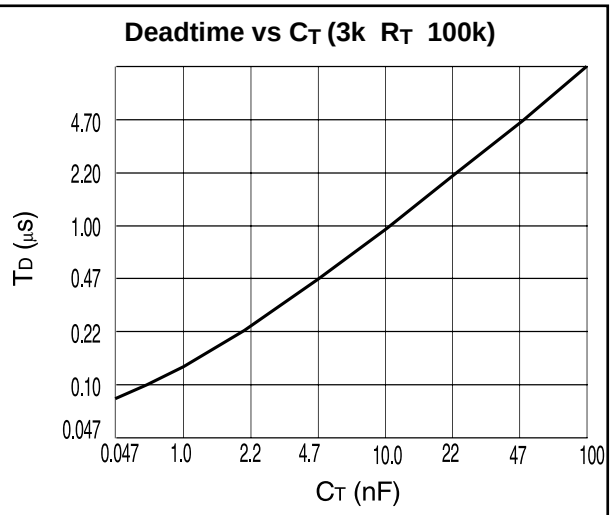

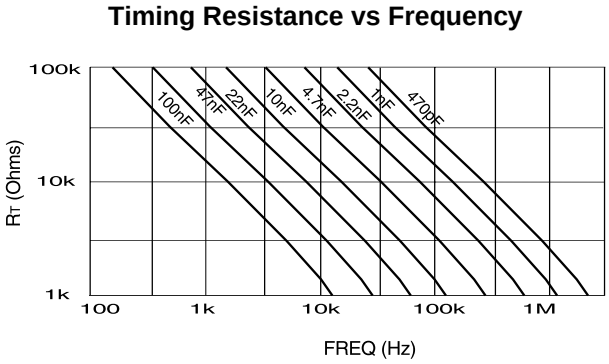

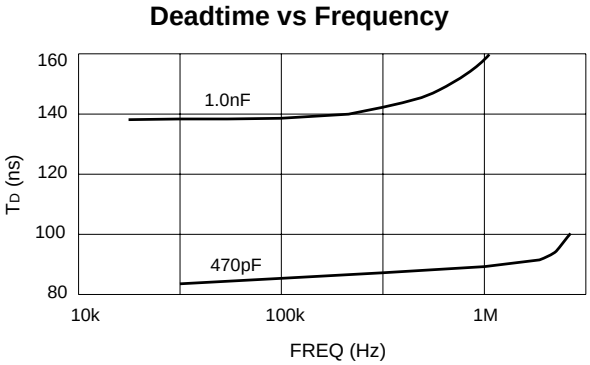

Synchronized Operation

Two Units in Close Proximity

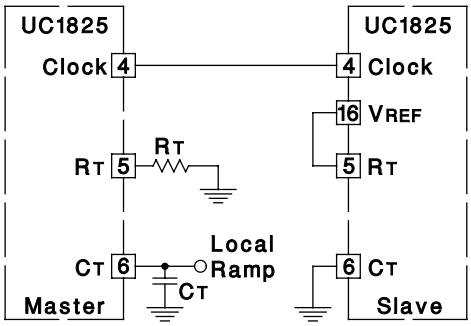

Generalized Synchronization

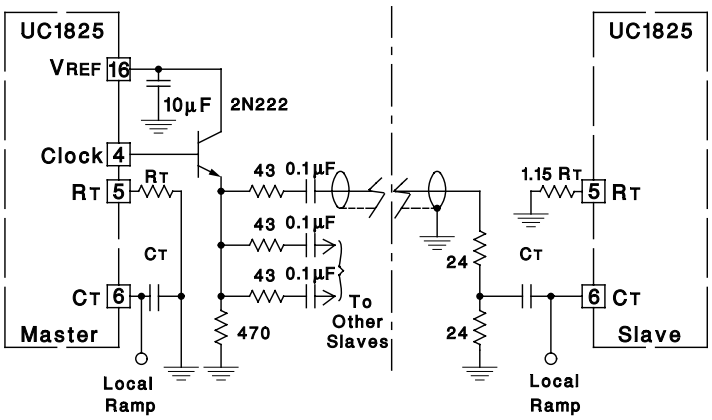

Forward Technique for Off-Line Voltage Mode Application

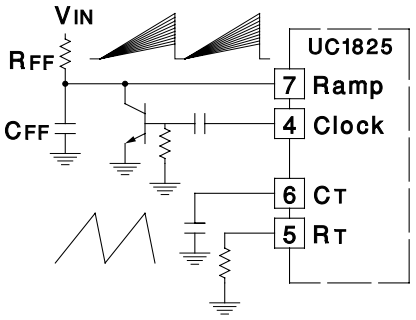

Constant Volt-Second Clamp Circuit

The circuit shown here will achieve a constant volt-second product clamp over varying input voltages. The ramp generator components, R_T and C_R are chosen so that the ramp at Pin 9 crosses the 1V threshold at the same time the desired maximum volt-second product is reached. The delay through the functional nor block must be such that the ramp capacitor can be completely discharged during the minimum deadtime.

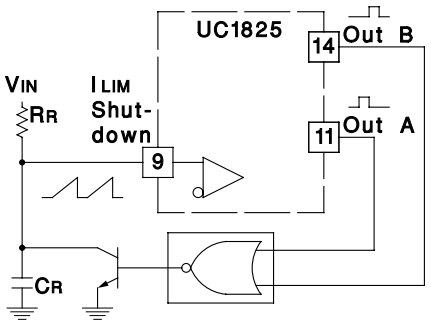

Output Section

Simplified Schematic

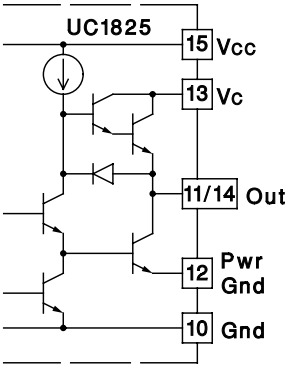

Rise/Fall Time (C_L=1nF)

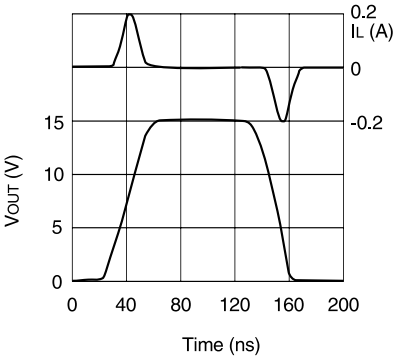

Rise/Fall Time (C_L=10nF)

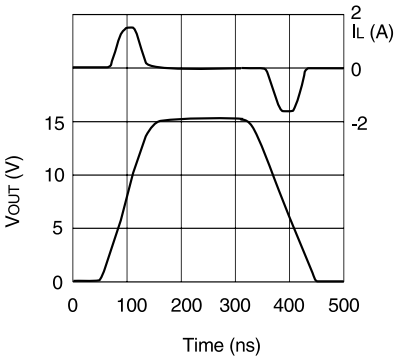

Saturation Curves

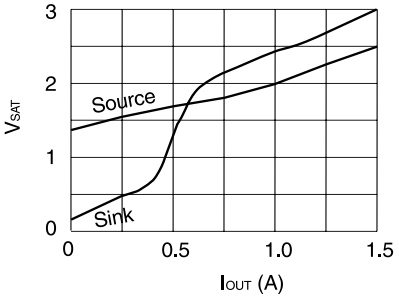

Open Loop Laboratory Test Fixture

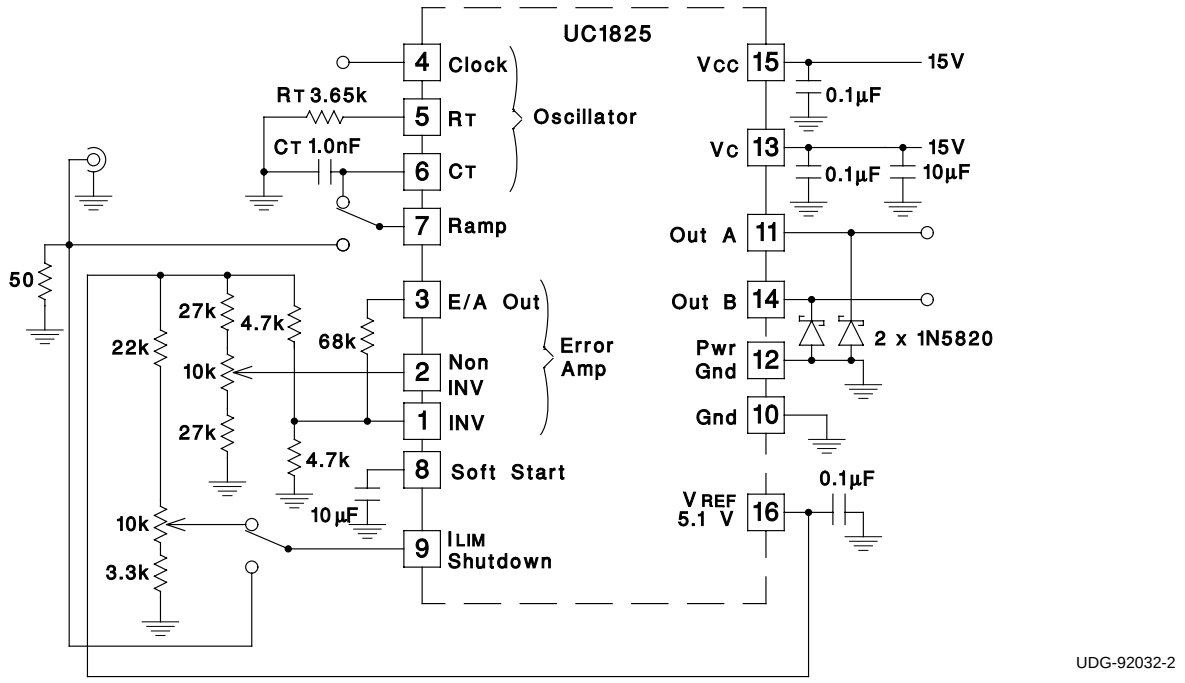

This test fixture is useful for exercising many of the UC1825's functions and measuring their specifications.

As with any wideband circuit, careful grounding and by-pass procedures should be followed. The use of a ground plane is highly recommended.

Design Example: 50W, 48V to 5V DC to DC Converter - 1.5MHz Clock Frequency

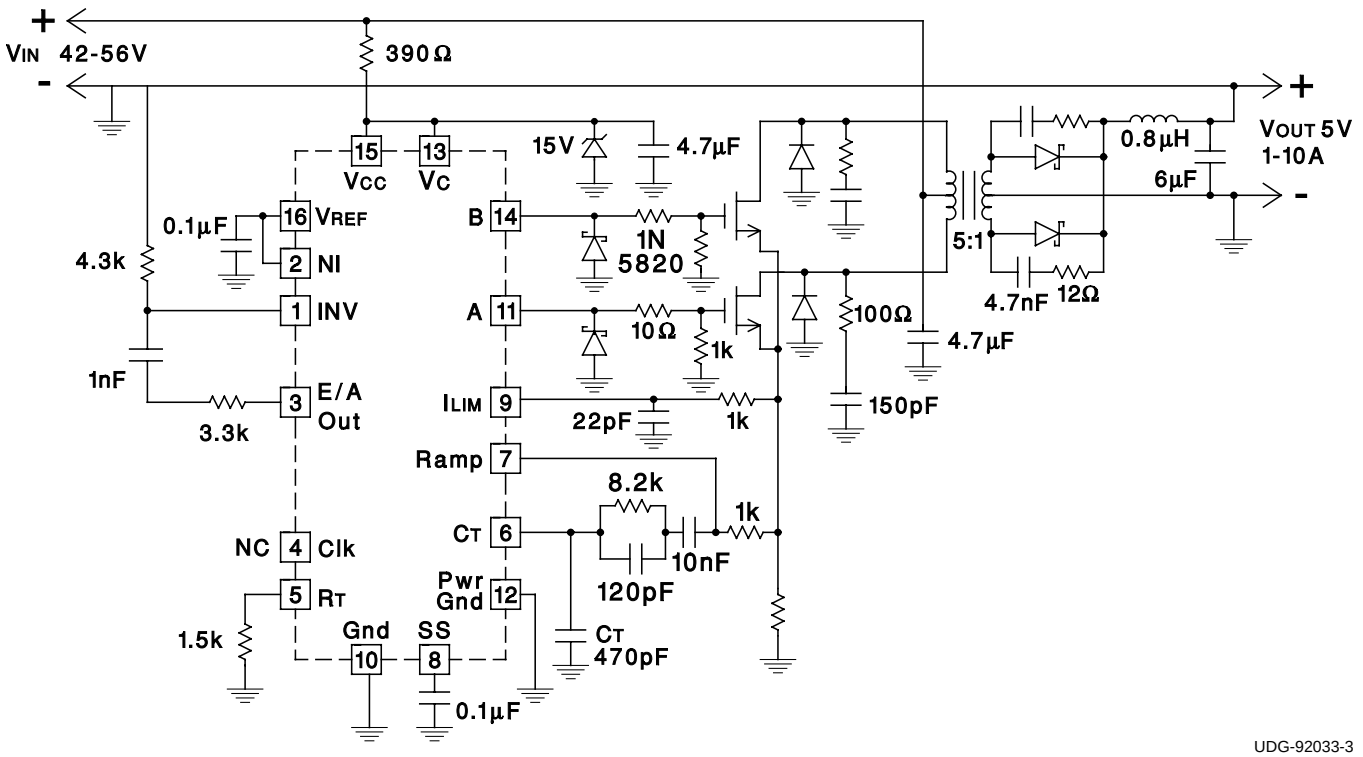

PACKAGING INFORMATION

Orderable Device	Status (1)	Package Type	Package Drawing	Pins	Package Qty	Eco Plan (2)	Lead/Ball Finish	MSL Peak Temp (3)
5962-87681012A	ACTIVE	LCCC	FK	20	1	TBD	POST-PLATE	Level-NC-NC-NC
5962-8768101EA	ACTIVE	CDIP	J	16	1	TBD	A42 SNPB	Level-NC-NC-NC
5962-8768101QFA	ACTIVE	CFP	W	16	1	TBD	A42 SNPB	Level-NC-NC-NC
5962-8768101V2A	ACTIVE	LCCC	FK	20	1	TBD	Call TI	Level-NC-NC-NC
5962-8768101VEA	ACTIVE	CDIP	J	16	1	TBD	Call TI	Level-NC-NC-NC
UC1825J	ACTIVE	CDIP	J	16	1	TBD	A42 SNPB	Level-NC-NC-NC
UC1825J883B	ACTIVE	CDIP	J	16	1	TBD	A42 SNPB	Level-NC-NC-NC
UC1825JQMLV	ACTIVE	CDIP	J	16		TBD	Call TI	Call TI
UC1825L	ACTIVE	LCCC	FK	20	1	TBD	POST-PLATE	Level-NC-NC-NC
UC1825L883B	ACTIVE	LCCC	FK	20	1	TBD	POST-PLATE	Level-NC-NC-NC
UC1825LQMLV	ACTIVE	LCCC	FK	20		TBD	Call TI	Call TI
UC1825W883B	ACTIVE	CFP	W	16	1	TBD	A42 SNPB	Level-NC-NC-NC
UC2825DW	ACTIVE	SOIC	DW	16	40	Green (RoHS & no Sb/Br)	CU NIPDAU	Level-2-260C-1 YEAR
UC2825DW/1	PREVIEW	SOIC	DW	16		Green (RoHS & no Sb/Br)	CU NIPDAU	Level-2-260C-1 YEAR
UC2825DWTR	ACTIVE	SOIC	DW	16	2000	Green (RoHS & no Sb/Br)	CU NIPDAU	Level-2-260C-1 YEAR
UC2825DWTRG4	ACTIVE	SOIC	DW	16	2000	Green (RoHS & no Sb/Br)	CU NIPDAU	Level-2-260C-1 YEAR
UC2825J	ACTIVE	CDIP	J	16	1	TBD	A42 SNPB	Level-NC-NC-NC
UC2825N	ACTIVE	PDIP	N	16	25	Green (RoHS & no Sb/Br)	CU NIPDAU	Level-NC-NC-NC
UC2825NG4	ACTIVE	PDIP	N	16	25	Green (RoHS & no Sb/Br)	CU NIPDAU	Level-NA-NA-NA
UC2825Q	ACTIVE	PLCC	FN	20	46	Green (RoHS & no Sb/Br)	CU SN	Level-2-260C-1 YEAR
UC2825QTR	ACTIVE	PLCC	FN	20	1000	Green (RoHS & no Sb/Br)	CU SN	Level-2-260C-1 YEAR
UC3825DW	ACTIVE	SOIC	DW	16	40	Green (RoHS & no Sb/Br)	CU NIPDAU	Level-2-260C-1 YEAR
UC3825DWG4	ACTIVE	SOIC	DW	16	40	Green (RoHS & no Sb/Br)	CU NIPDAU	Level-2-260C-1 YEAR
UC3825DWTR	ACTIVE	SOIC	DW	16	2000	Green (RoHS & no Sb/Br)	CU NIPDAU	Level-2-260C-1 YEAR
UC3825DWTRG4	ACTIVE	SOIC	DW	16	2000	Green (RoHS & no Sb/Br)	CU NIPDAU	Level-2-260C-1 YEAR
UC3825J	ACTIVE	CDIP	J	16	1	TBD	A42 SNPB	Level-NC-NC-NC
UC3825N	ACTIVE	PDIP	N	16	25	Green (RoHS & no Sb/Br)	CU NIPDAU	Level-NC-NC-NC
UC3825NG4	ACTIVE	PDIP	N	16	25	Green (RoHS & no Sb/Br)	CU NIPDAU	Level-NC-NC-NC
UC3825Q	ACTIVE	PLCC	FN	20	46	Green (RoHS & no Sb/Br)	CU SN	Level-2-260C-1 YEAR
UC3825QTR	ACTIVE	PLCC	FN	20	1000	Green (RoHS & no Sb/Br)	CU SN	Level-2-260C-1 YEAR

(1) The marketing status values are defined as follows:
ACTIVE: Product device recommended for new designs.
LIFEBUY: TI has announced that the device will be discontinued, and a lifetime-buy period is in effect.
NRND: Not recommended for new designs. Device is in production to support existing customers, but TI does not recommend using this part in a new design.
PREVIEW: Device has been announced but is not in production. Samples may or may not be available.
OBSOLETE: TI has discontinued the production of the device.

(2) Eco Plan - The planned eco-friendly classification: Pb-Free (RoHS) or Green (RoHS & no Sb/Br) - please check http://www.ti.com/productcontent for the latest availability information and additional product content details.
TBD: The Pb-Free/Green conversion plan has not been defined.
Pb-Free (RoHS): TI's terms "Lead-Free" or "Pb-Free" mean semiconductor products that are compatible with the current RoHS requirements for all 6 substances, including the requirement that lead not exceed 0.1% by weight in homogeneous materials. Where designed to be soldered at high temperatures, TI Pb-Free products are suitable for use in specified lead-free processes.
Green (RoHS & no Sb/Br): TI defines "Green" to mean Pb-Free (RoHS compatible), and free of Bromine (Br) and Antimony (Sb) based flame retardants (Br or Sb do not exceed 0.1% by weight in homogeneous material)

(3) MSL, Peak Temp. -- The Moisture Sensitivity Level rating according to the JEDEC industry standard classifications, and peak solder temperature.

Important Information and Disclaimer: The information provided on this page represents TI's knowledge and belief as of the date that it is provided. TI bases its knowledge and belief on information provided by third parties, and makes no representation or warranty as to the accuracy of such information. Efforts are underway to better integrate information from third parties. TI has taken and continues to take reasonable steps to provide representative and accurate information but may not have conducted destructive testing or chemical analysis on incoming materials and chemicals. TI and TI suppliers consider certain information to be proprietary, and thus CAS numbers and other limited information may not be available for release.

In no event shall TI's liability arising out of such information exceed the total purchase price of the TI part(s) at issue in this document sold by TI to Customer on an annual basis.

J (R–GDIP–T**) CERAMIC DUAL IN–LINE PACKAGE

14 LEADS SHOWN

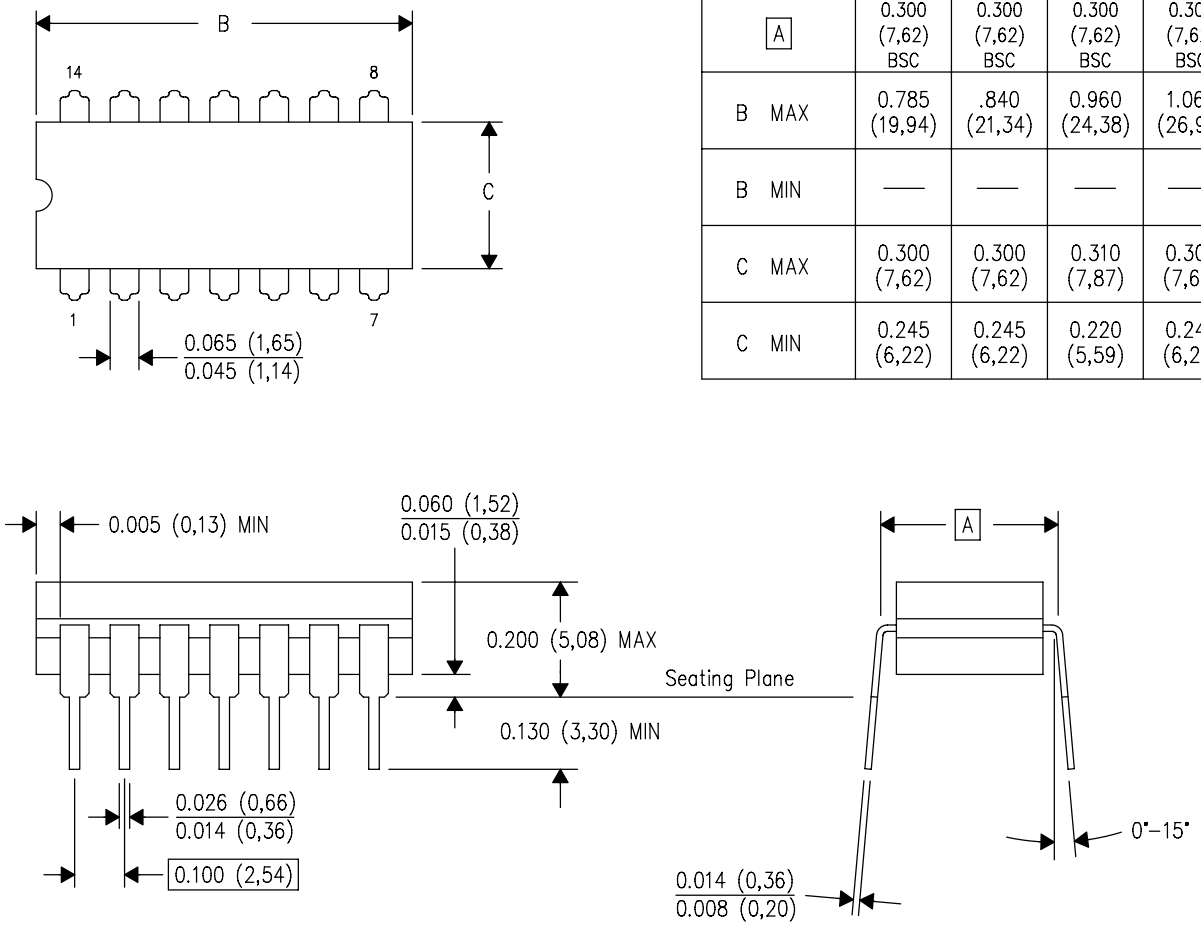

DIM \ PINS **	14	16	18	20
A	0.300 (7,62) BSC	0.300 (7,62) BSC	0.300 (7,62) BSC	0.300 (7,62) BSC
B MAX	0.785 (19,94)	.840 (21,34)	0.960 (24,38)	1.060 (26,92)
B MIN	—	—	—	—
C MAX	0.300 (7,62)	0.300 (7,62)	0.310 (7,87)	0.300 (7,62)
C MIN	0.245 (6,22)	0.245 (6,22)	0.220 (5,59)	0.245 (6,22)

4040083/F 03/03

NOTES:
- A. All linear dimensions are in inches (millimeters).
- B. This drawing is subject to change without notice.
- C. This package is hermetically sealed with a ceramic lid using glass frit.
- D. Index point is provided on cap for terminal identification only on press ceramic glass frit seal only.
- E. Falls within MIL STD 1835 GDIP1–T14, GDIP1–T16, GDIP1–T18 and GDIP1–T20.

W (R–GDFP–F16) CERAMIC DUAL FLATPACK

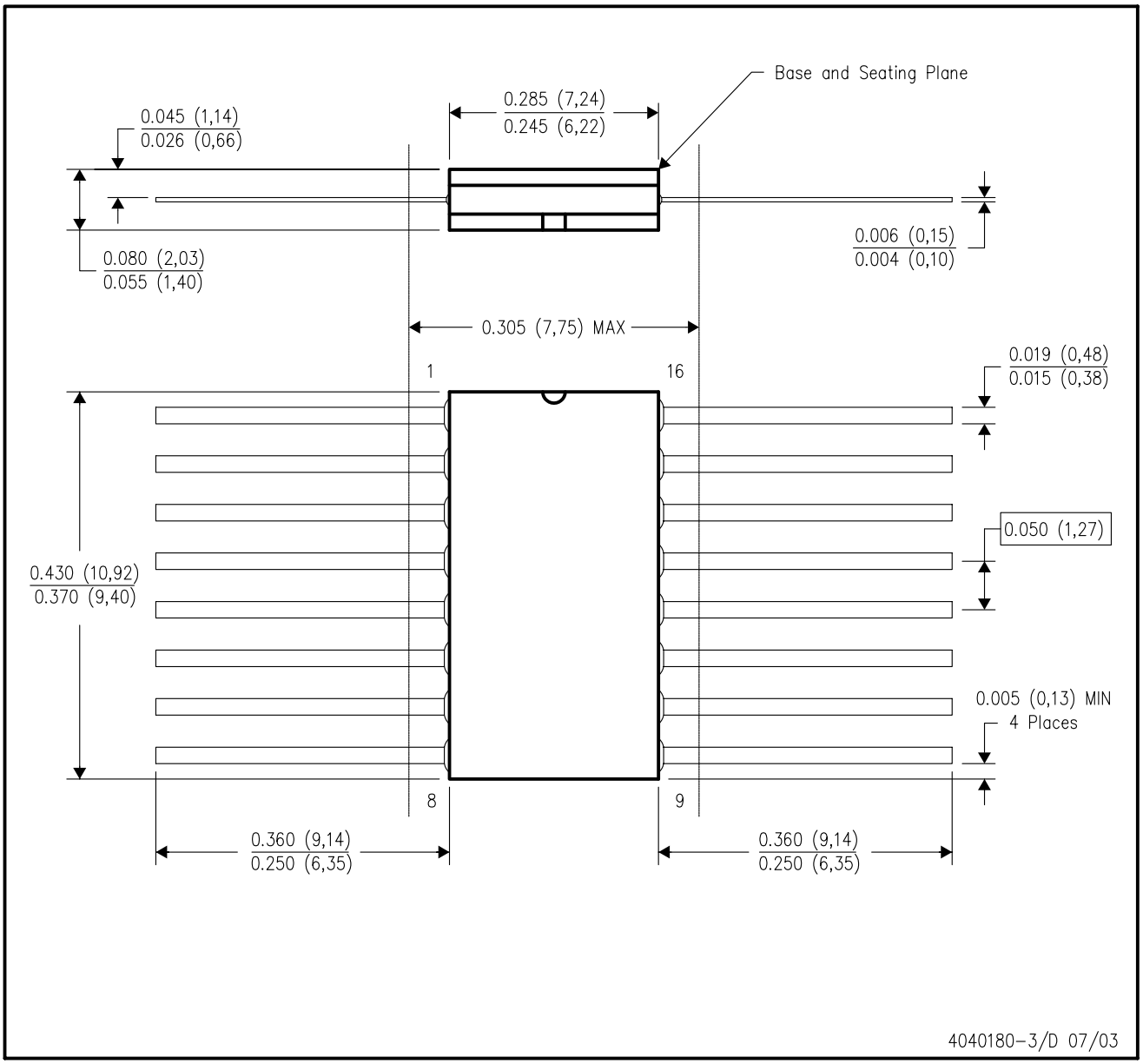

NOTES:
A. All linear dimensions are in inches (millimeters).
B. This drawing is subject to change without notice.
C. This package can be hermetically sealed with a ceramic lid using glass frit.
D. Index point is provided on cap for terminal identification only.
E. Falls within MIL STD 1835 GDFP1–F16 and JEDEC MO–092AC

FK (S-CQCC-N**)

LEADLESS CERAMIC CHIP CARRIER

28 TERMINAL SHOWN

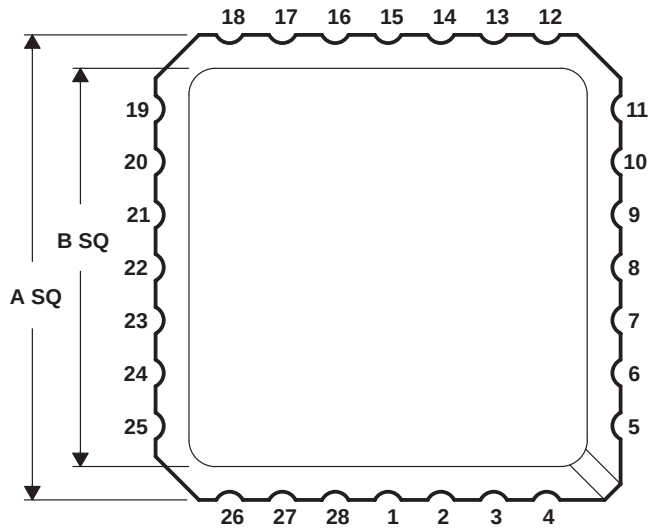

NO. OF TERMINALS **	A		B	
	MIN	MAX	MIN	MAX
20	0.342 (8,69)	0.358 (9,09)	0.307 (7,80)	0.358 (9,09)
28	0.442 (11,23)	0.458 (11,63)	0.406 (10,31)	0.458 (11,63)
44	0.640 (16,26)	0.660 (16,76)	0.495 (12,58)	0.560 (14,22)
52	0.739 (18,78)	0.761 (19,32)	0.495 (12,58)	0.560 (14,22)
68	0.938 (23,83)	0.962 (24,43)	0.850 (21,6)	0.858 (21,8)
84	1.141 (28,99)	1.165 (29,59)	1.047 (26,6)	1.063 (27,0)

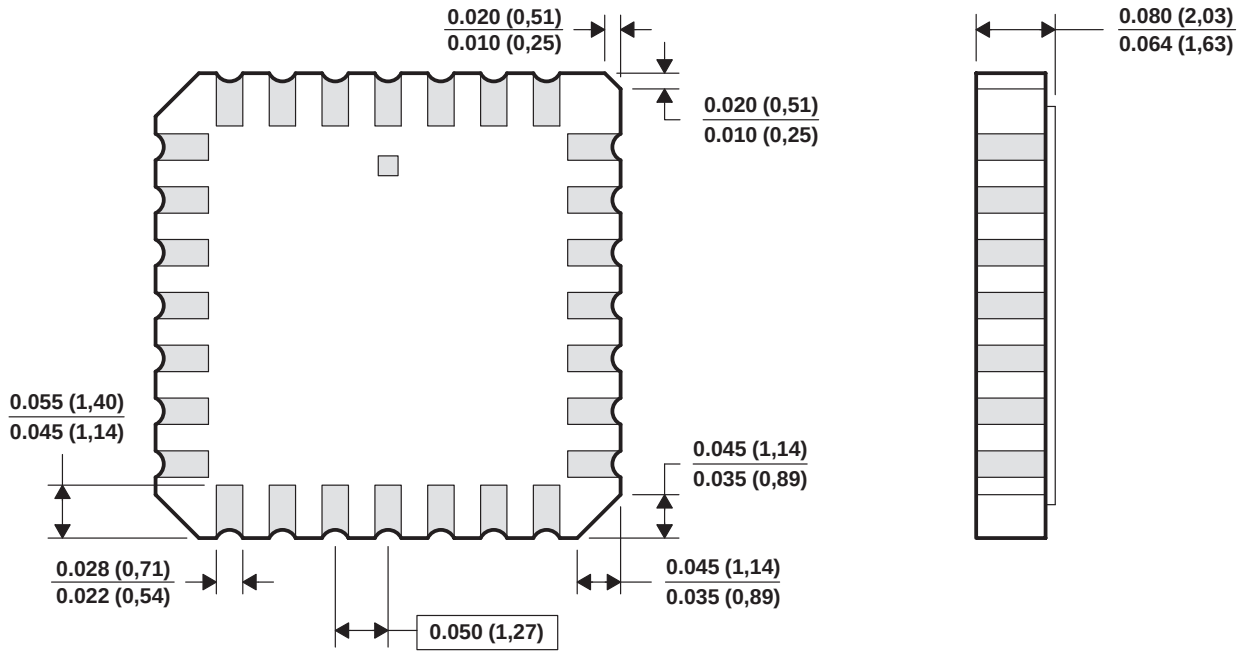

4040140/D 10/96

NOTES:
A. All linear dimensions are in inches (millimeters).
B. This drawing is subject to change without notice.
C. This package can be hermetically sealed with a metal lid.
D. The terminals are gold plated.
E. Falls within JEDEC MS-004

N (R–PDIP–T**) PLASTIC DUAL–IN–LINE PACKAGE

16 PINS SHOWN

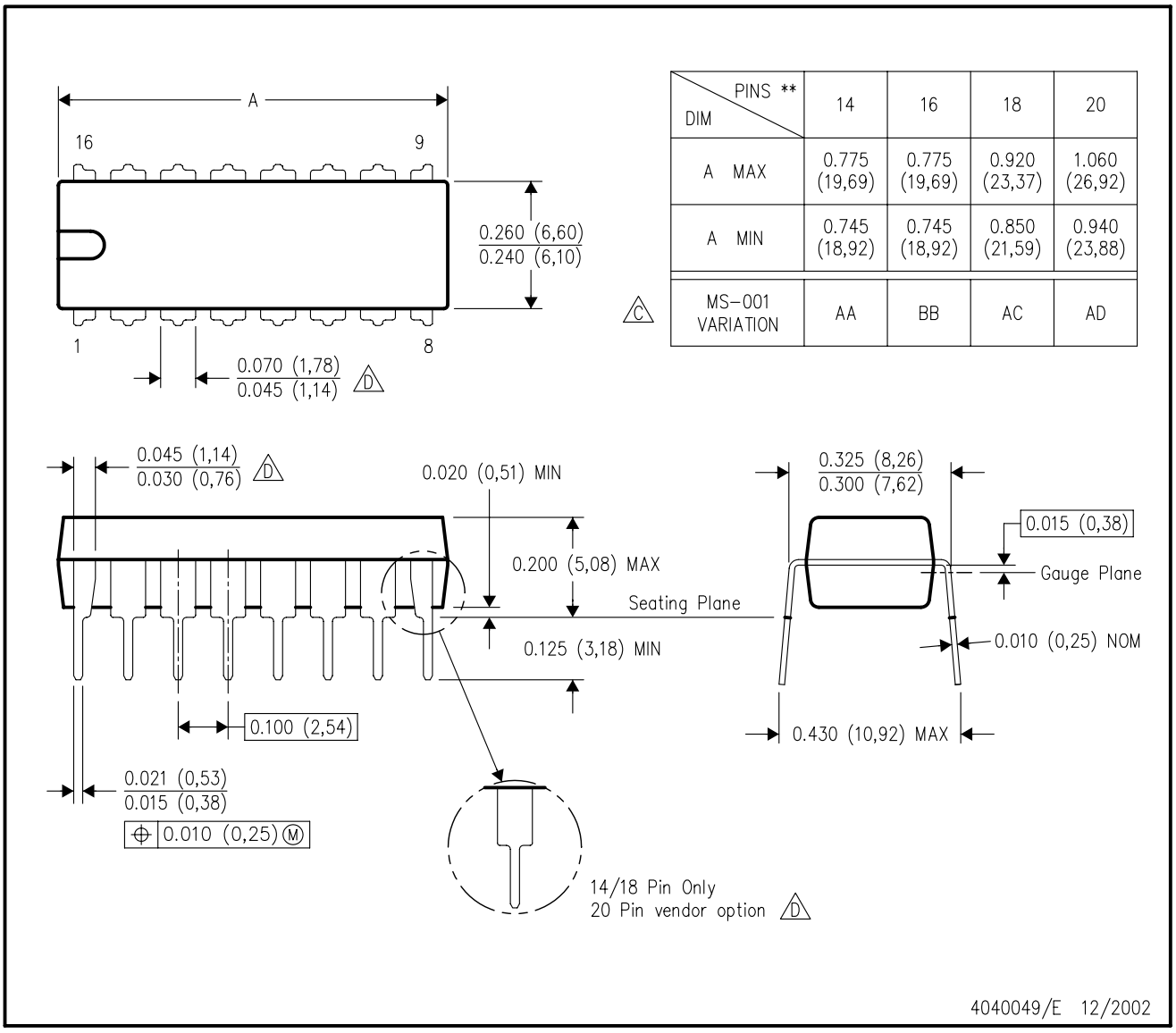

DIM \ PINS **	14	16	18	20
A MAX	0.775 (19,69)	0.775 (19,69)	0.920 (23,37)	1.060 (26,92)
A MIN	0.745 (18,92)	0.745 (18,92)	0.850 (21,59)	0.940 (23,88)
MS–001 VARIATION (C)	AA	BB	AC	AD

NOTES:
A. All linear dimensions are in inches (millimeters).
B. This drawing is subject to change without notice.
C. Falls within JEDEC MS–001, except 18 and 20 pin minimum body length (Dim A).
D. The 20 pin end lead shoulder width is a vendor option, either half or full width.

FN (S-PQCC-J**)

PLASTIC J-LEADED CHIP CARRIER

20 PIN SHOWN

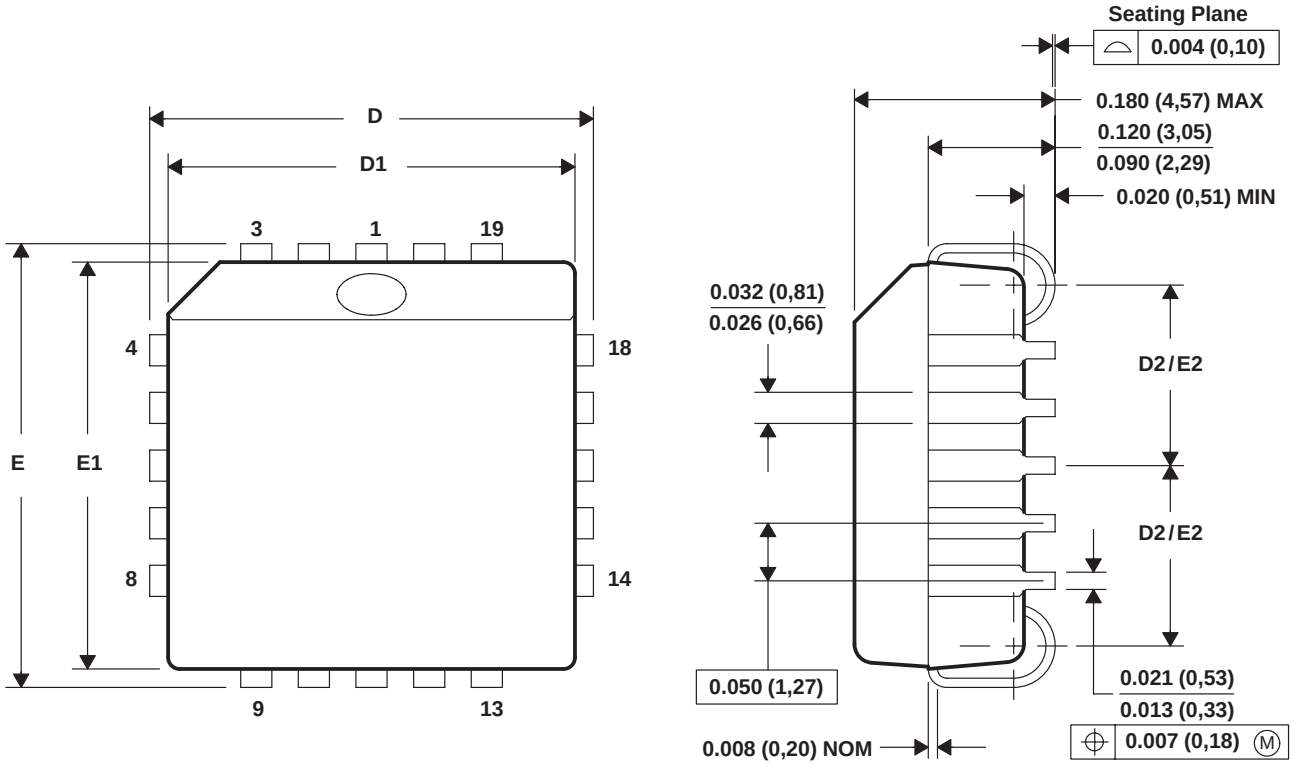

NO. OF PINS **	D / E		D1 / E1		D2 / E2	
	MIN	MAX	MIN	MAX	MIN	MAX
20	0.385 (9,78)	0.395 (10,03)	0.350 (8,89)	0.356 (9,04)	0.141 (3,58)	0.169 (4,29)
28	0.485 (12,32)	0.495 (12,57)	0.450 (11,43)	0.456 (11,58)	0.191 (4,85)	0.219 (5,56)
44	0.685 (17,40)	0.695 (17,65)	0.650 (16,51)	0.656 (16,66)	0.291 (7,39)	0.319 (8,10)
52	0.785 (19,94)	0.795 (20,19)	0.750 (19,05)	0.756 (19,20)	0.341 (8,66)	0.369 (9,37)
68	0.985 (25,02)	0.995 (25,27)	0.950 (24,13)	0.958 (24,33)	0.441 (11,20)	0.469 (11,91)
84	1.185 (30,10)	1.195 (30,35)	1.150 (29,21)	1.158 (29,41)	0.541 (13,74)	0.569 (14,45)

4040005 / B 03/95

NOTES: A. All linear dimensions are in inches (millimeters).
B. This drawing is subject to change without notice.
C. Falls within JEDEC MS-018

DW (R–PDSO–G16) PLASTIC SMALL–OUTLINE PACKAGE

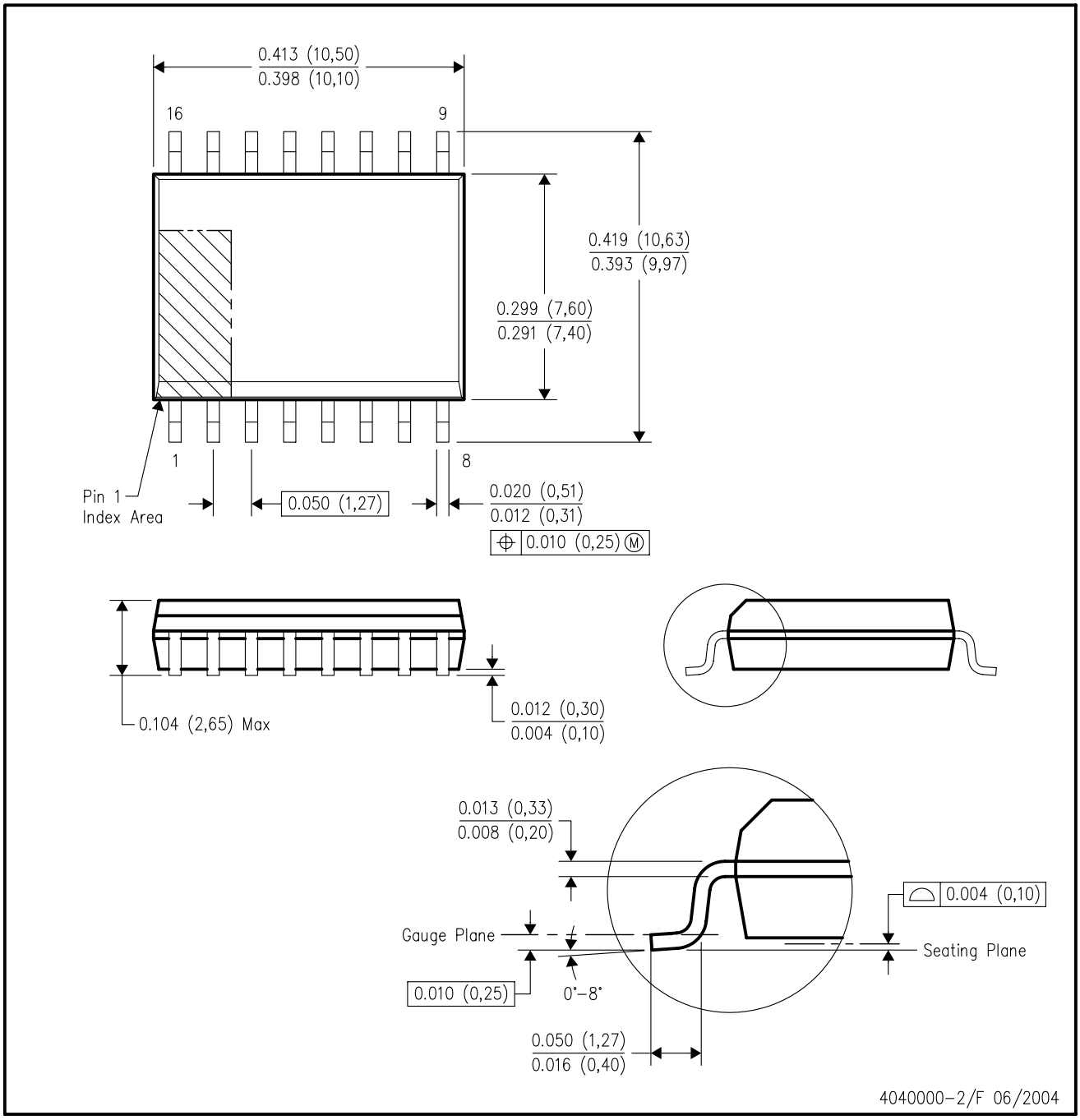

NOTES:
A. All linear dimensions are in inches (millimeters).
B. This drawing is subject to change without notice.
C. Body dimensions do not include mold flash or protrusion not to exceed 0.006 (0,15).
D. Falls within JEDEC MS–013 variation AA.

IMPORTANT NOTICE

Texas Instruments Incorporated and its subsidiaries (TI) reserve the right to make corrections, modifications, enhancements, improvements, and other changes to its products and services at any time and to discontinue any product or service without notice. Customers should obtain the latest relevant information before placing orders and should verify that such information is current and complete. All products are sold subject to TI's terms and conditions of sale supplied at the time of order acknowledgment.

TI warrants performance of its hardware products to the specifications applicable at the time of sale in accordance with TI's standard warranty. Testing and other quality control techniques are used to the extent TI deems necessary to support this warranty. Except where mandated by government requirements, testing of all parameters of each product is not necessarily performed.

TI assumes no liability for applications assistance or customer product design. Customers are responsible for their products and applications using TI components. To minimize the risks associated with customer products and applications, customers should provide adequate design and operating safeguards.

TI does not warrant or represent that any license, either express or implied, is granted under any TI patent right, copyright, mask work right, or other TI intellectual property right relating to any combination, machine, or process in which TI products or services are used. Information published by TI regarding third-party products or services does not constitute a license from TI to use such products or services or a warranty or endorsement thereof. Use of such information may require a license from a third party under the patents or other intellectual property of the third party, or a license from TI under the patents or other intellectual property of TI.

Reproduction of information in TI data books or data sheets is permissible only if reproduction is without alteration and is accompanied by all associated warranties, conditions, limitations, and notices. Reproduction of this information with alteration is an unfair and deceptive business practice. TI is not responsible or liable for such altered documentation.

Resale of TI products or services with statements different from or beyond the parameters stated by TI for that product or service voids all express and any implied warranties for the associated TI product or service and is an unfair and deceptive business practice. TI is not responsible or liable for any such statements.

Following are URLs where you can obtain information on other Texas Instruments products and application solutions:

Products		**Applications**	
Amplifiers	amplifier.ti.com	Audio	www.ti.com/audio
Data Converters	dataconverter.ti.com	Automotive	www.ti.com/automotive
DSP	dsp.ti.com	Broadband	www.ti.com/broadband
Interface	interface.ti.com	Digital Control	www.ti.com/digitalcontrol
Logic	logic.ti.com	Military	www.ti.com/military
Power Mgmt	power.ti.com	Optical Networking	www.ti.com/opticalnetwork
Microcontrollers	microcontroller.ti.com	Security	www.ti.com/security
		Telephony	www.ti.com/telephony
		Video & Imaging	www.ti.com/video
		Wireless	www.ti.com/wireless

Mailing Address: Texas Instruments
Post Office Box 655303 Dallas, Texas 75265

Copyright © 2005, Texas Instruments Incorporated