Circuit Breakers with Communication Capability
SENTRON WL and SENTRON VL

MODBUS

System Manual · 07/2011

Searchdatasheet.com

Low-Voltage Power Distribution and Electrical Installation Technology

SIEMENS

SIEMENS

SENTRON

Protection devices 3WL/3VL circuit breakers with communication capability - Modbus

System Manual

Introduction and overview 1

General information 2

SENTRON WL 3

SENTRON VL 4

Zone Selective Interlocking 5

Modbus RTU data transfer 6

powerconfig 7

Data library 8

List of abbreviations A

07/2011

A5E02126891-02

Legal information

Warning notice system

This manual contains notices you have to observe in order to ensure your personal safety, as well as to prevent damage to property. The notices referring to your personal safety are highlighted in the manual by a safety alert symbol, notices referring only to property damage have no safety alert symbol. These notices shown below are graded according to the degree of danger.

⚠ DANGER
indicates that death or severe personal injury **will** result if proper precautions are not taken.

⚠ WARNING
indicates that death or severe personal injury **may** result if proper precautions are not taken.

⚠ CAUTION
with a safety alert symbol, indicates that minor personal injury can result if proper precautions are not taken.

CAUTION
without a safety alert symbol, indicates that property damage can result if proper precautions are not taken.

NOTICE
indicates that an unintended result or situation can occur if the relevant information is not taken into account.

If more than one degree of danger is present, the warning notice representing the highest degree of danger will be used. A notice warning of injury to persons with a safety alert symbol may also include a warning relating to property damage.

Qualified Personnel

The product/system described in this documentation may be operated only by **personnel qualified** for the specific task in accordance with the relevant documentation, in particular its warning notices and safety instructions. Qualified personnel are those who, based on their training and experience, are capable of identifying risks and avoiding potential hazards when working with these products/systems.

Proper use of Siemens products

Note the following:

⚠ WARNING
Siemens products may only be used for the applications described in the catalog and in the relevant technical documentation. If products and components from other manufacturers are used, these must be recommended or approved by Siemens. Proper transport, storage, installation, assembly, commissioning, operation and maintenance are required to ensure that the products operate safely and without any problems. The permissible ambient conditions must be complied with. The information in the relevant documentation must be observed.

Trademarks

All names identified by ® are registered trademarks of Siemens AG. The remaining trademarks in this publication may be trademarks whose use by third parties for their own purposes could violate the rights of the owner.

Disclaimer of Liability

We have reviewed the contents of this publication to ensure consistency with the hardware and software described. Since variance cannot be precluded entirely, we cannot guarantee full consistency. However, the information in this publication is reviewed regularly and any necessary corrections are included in subsequent editions.

Siemens AG
Industry Sector
Postfach 48 48
90026 NÜRNBERG
GERMANY

Order number: 3ZX1012-0WL10-AC1
Ⓟ 08/2011

Copyright © Siemens AG 2009.
Technical data subject to change

Table of contents

1 Introduction and overview 9

1.1 General information 9
1.1.1 Structure of the manual 9
1.1.2 Introduction 9
1.1.3 SENTRON circuit breakers 10

1.2 Bus systems 12
1.2.1 Modbus RTU 12
1.2.2 Ethernet 13
1.2.3 PROFIBUS DP 14
1.2.4 Communication structure of the SENTRON circuit breakers 17

2 General information 19

2.1 Other system manuals and literature 19

2.2 Approvals 19

2.3 Standards and approvals 19

2.4 Orientation aids 20

2.5 Up-to-the-minute information at all times 20

2.6 Scope 20

3 SENTRON WL 21

3.1 Introduction and overview 21
3.1.1 The CubicleBUS 21
3.1.2 Communications capability of electronic trip units (ETU) 21
3.1.3 Function overview of the overcurrent tripping system 22
3.1.4 Availability of the data on the CubicleBUS 27
3.1.5 Brief description of SENTRON WL 29

3.2 COM16 and BSS module 32
3.2.1 COM16 Modbus RTU module 32
3.2.2 Connection of the COM16 module 33
3.2.3 Write protection (WriteEnable) 38
3.2.4 Data exchange via the COM16 38
3.2.5 Breaker Status Sensor (BSS) 41

3.3 Metering functions 42
3.3.1 Metering function PLUS 42
3.3.2 Voltage transformer 48
3.3.3 Delay of the threshold warning 52

3.4 Functions and parameters 52
3.4.1 Important functions and parameters for communication 52
3.4.2 Load management 53
3.4.3 Extended protection function 54
3.4.4 Threshold values 55

3.4.5 Lower limit of power transmission ... 55
3.4.6 Direction of incoming supply ... 55
3.4.7 Events and tripping operations ... 56

3.5 External CubicleBUS modules ... 57
3.5.1 General information ... 57
3.5.1.1 Rotary coding switch ... 58
3.5.1.2 Installing the CubicleBUS modules ... 58
3.5.1.3 Connection of the power supply ... 59
3.5.1.4 Maximum configuration of the CubicleBUS ... 59
3.5.1.5 Installation guidelines for the CubicleBUS ... 60
3.5.1.6 Connection of external CubicleBUS modules ... 60
3.5.1.7 LED indicator ... 63
3.5.1.8 Test of the digital input and output modules ... 64
3.5.2 Digital input module ... 66
3.5.2.1 Parameter set changeover ... 67
3.5.2.2 Technical data ... 68
3.5.3 Digital output module with rotary coding switch ... 68
3.5.3.1 Technical data ... 70
3.5.4 Configuration of the digital output module ... 71
3.5.4.1 Technical data ... 71
3.5.4.2 LED indicator ... 73
3.5.5 Analog output module ... 74
3.5.5.1 Selecting the measured values ... 75
3.5.5.2 Test function ... 79
3.5.5.3 Technical data ... 79

3.6 Measuring accuracy ... 80
3.6.1 3WL breaker measuring accuracy ... 80

3.7 External current consumption with CubicleBUS ... 80
3.7.1 Power required by a SENTRON WL with CubicleBUS ... 80
3.7.2 Selecting the power supply ... 82

4 SENTRON VL ... 85

4.1 Brief description ... 85
4.1.1 Brief description of SENTRON VL ... 85
4.1.2 Overview of the accessories ... 86
4.1.3 Properties of the trip units ... 88
4.1.4 Electronic overcurrent tripping systems ... 88
4.1.5 Protection functions ... 88
4.1.6 Data transfer by means of Modbus RTU ... 91

4.2 COM21 connection ... 93
4.2.1 Data exchange with the COM21 ... 93
4.2.2 Setting the MODBUS address of the COM21 ... 94
4.2.3 COM21 pin assignment ... 95
4.2.4 Write protection with COM21 ... 96
4.2.5 Communication connection to the ETU ... 96
4.2.6 Connecting the optional motorized operating mechanism to COM21 ... 97
4.2.7 LED display on the COM21 ... 102

5 Zone Selective Interlocking ... 105

5.1 ZSI ... 105

5.1.1 Selectivity 105
5.1.2 Time selectivity 105
5.1.3 ZSI function 106
5.1.4 Operating principle 107
5.1.5 Course over time 107
5.1.5.1 Condition ZSI = ON and presence of a short-circuit (S) 107
5.1.5.2 Condition ZSI = ON and presence of a ground fault (G) 108

5.2 Examples 109
5.2.1 Function example 109
5.2.2 Tabular representation 110
5.2.2.1 Short-circuit 110
5.2.2.2 Ground fault 110
5.2.2.3 Example of 3 grading levels without coupling switch 111
5.2.2.4 Cancelation of the ZSI OUT signal 112
5.2.2.5 Coupling switch 113
5.2.2.6 Wiring example 114
5.2.2.7 Circuit breakers without ZSI function 116

5.3 SENTRON 3WL 117
5.3.1 Technical data 117
5.3.2 Applications 118
5.3.3 Configuration 118
5.3.4 Connection 118
5.3.5 Test function 118
5.3.6 LED 118

5.4 SENTRON 3VL 119
5.4.1 COM20/COM 21 119
5.4.2 Technical data 119
5.4.3 Applications 120
5.4.4 Configuration 120
5.4.5 Connection 120
5.4.6 LED 121

6 Modbus RTU data transfer 123

6.1 Integration of the circuit breakers into a communication system 123

6.2 Modbus RTU 123
6.2.1 Structure of the job message frame 123
6.2.2 Character frames 124
6.2.3 Communication parameter settings 125
6.2.4 Data storage 126
6.2.4.1 Control bytes 126
6.2.4.2 Status bytes 127
6.2.4.3 Basic type data 128
6.2.4.4 Value buffer area 130
6.2.5 Function codes 131
6.2.5.1 Function "01 – Read output bits" 131
6.2.5.2 Function "02 – Read input" 132
6.2.5.3 Function "03 – Read value buffer area" 133
6.2.5.4 Function "04 – Read basic type data" 134
6.2.5.5 Function "05 – Write individual output" 135
6.2.5.6 Function "07 – Read diagnostic information" 136

6.2.5.7 Function "08 – Diagnostics" ... 137
6.2.5.8 Function "11 – Get number of messages" ... 139
6.2.5.9 Function code "12 – Communication events" ... 140
6.2.5.10 Function "15 – Write output block" ... 141
6.2.5.11 Function "16 – Write value buffer area" ... 142
6.2.5.12 Summary of exception messages ... 143

6.3 Transition to TCP/IP networks ... 145

7 powerconfig ... 147

7.1 Brief description ... 147

7.2 Delivery form ... 148

7.3 Software requirements ... 148

7.4 Online with powerconfig ... 149

7.5 Offline with powerconfig ... 149

7.6 User interface ... 150

7.7 "Overview" view ... 151

7.8 "Parameters" view ... 153

7.9 Communication link to the circuit breakers ... 154
7.9.1 USB/RS485 adapter as point-to-point link ... 154
7.9.2 USB/RS485 adapter ... 155
7.9.3 LAN/RS485 gateway ... 156

8 Data library ... 157

8.1 The data library ... 157

8.2 Chapter overview ... 157

8.3 Scaling ... 158

8.4 Abbreviations of the data sources ... 158

8.5 Units ... 159

8.6 Function classes ... 159
8.6.1 Function classes of the data points ... 159
8.6.2 Data points for controlling the SENTRON circuit breakers ... 160
8.6.3 Data points for detailed diagnostics of the SENTRON circuit breakers ... 160
8.6.4 Data points for identifying the SENTRON circuit breakers ... 162
8.6.5 Data points for measured values current ... 164
8.6.6 Data points for measured values voltage ... 166
8.6.7 Data points for measured values power ... 168
8.6.8 Data points for other measured values ... 170
8.6.9 Data points for the time stamp (TS) of the measured values ... 172
8.6.10 Parameters of the SENTRON circuit breakers (primary protection function) ... 174
8.6.11 Parameters of the SENTRON circuit breakers (extended protection function) ... 176
8.6.12 Parameters of the SENTRON circuit breakers (parameters for threshold value alarms) ... 178
8.6.13 Parameters of the SENTRON circuit breakers (communication, measured value adjustment, etc.) ... 181

8.7 Register blocks for SENTRON WL ... 182
8.7.1 Register block RB 51 main overview ... 182

8.7.2 Register block RB 64 data of the harmonic analysis 185
8.7.3 Register block RB 68 data of the CubicleBUS module 186
8.7.4 Register block RB 69 status of the modules 187
8.7.5 Register block RB 72 min. and max. measured values 189
8.7.6 Register block RB 73 min. and max. measured values of the voltages 193
8.7.7 Register block RB 74 min. and max. measured values of the powers 196
8.7.8 Register block RB 76 min. and max. measured values of the frequency and the THD 198
8.7.9 Register block RB 77 min. and max. measured values of the temperatures 200
8.7.10 Register block RB 91 statistics information 201
8.7.11 Register block RB 92 diagnostics data 203
8.7.12 Register block RB 93 control of the circuit breakers 205
8.7.13 Register block RB 94 current measured values 207
8.7.14 Register block RB 97 Detailed identification 213
8.7.15 Register block RB 100 Identification in overview 215
8.7.16 Register block RB 128 parameters of the metering function and extended protection function 216
8.7.17 Register block RB 129 parameters of the protection function and settings for load shedding and load pick up 219
8.7.18 Register block RB 131 switching the parameters for the extended protection function and the threshold values on and off 223
8.7.19 Register block RB 130 parameters for the threshold values 226
8.7.20 Register block RB 160 parameters for communication 231
8.7.21 Register block RB 162 device configuration 232
8.7.22 Register block RB 165 identification comment 233

8.8 SENTRON 3VL data areas 234
8.8.1 Cyclic data 234
8.8.2 Protection settings 237
8.8.3 Diagnostics/counters 239
8.8.4 Configuration 240
8.8.5 Trip log 240
8.8.6 Commands 241
8.8.7 Settings and status of the communication module 242
8.8.8 Description of the communication module 242
8.8.9 ETU identification 243
8.8.10 Identification of the communication module 243

8.9 Formats 243
8.9.1 Formats of the data points 243
8.9.2 General data formats 244
8.9.3 Special data formats 246
8.9.4 Data formats 15 to 24 247
8.9.5 Data formats 88 to 162 252
8.9.6 Data formats 307 to 373 260
8.9.7 Data formats 401 to 426 263

A List of abbreviations 267

A.1 List of abbreviations 267

Glossary 269

Index 273

Introduction and overview 1

1.1 General information

1.1.1 Structure of the manual

Purpose of the manual

This manual describes the diverse application options of circuit breakers with communication capability in power distribution.

1.1.2 Introduction

In industrial automation, the demand for communication capability, data transparency and flexibility is growing constantly. To enable industrial switchgear technology to meet this demand, the use of bus systems and intelligent switching devices is unavoidable since industrial production and building management are now inconceivable without communication technology.

The demands on the electrical and mechanical properties of circuit breakers, their adaptability and cost-effectiveness have contributed to the unexpectedly far-reaching development of circuit breakers in recent years. Progress in rationalization and automation has accelerated this process.

1.1.3 SENTRON circuit breakers

SENTRON is a range of circuit breakers with communication capability comprising two models:

- SENTRON WL: air circuit breaker
- SENTRON VL: compact circuit breaker

In power distribution systems they can transfer important information via bus systems to a central control room for the purpose of:

- Instantaneous values
- Energy values
- Demand values
- Min / Max
- Diagnostics management
- Fault management
- Maintenance management
- Cost center management

Utilization of the resulting possibilities turns a circuit breaker into something more than just a switching and protection device. Only when the automation and low-voltage switchgear and controlgear used can be fully integrated into a communication solution in a user-friendly and fully functional way, can the following functions be implemented:

- Integrated communication
- Data acquisition
- Forwarding
- Evaluation
- Visualization of data

Data acquisition and evaluation

Status information, alarm messages, trigger information, and threshold violations (e.g. overcurrent, phase unbalance, overvoltage) are acquired and forwarded. Transparency in power distribution enables a fast response to such statuses. Important messages can be transmitted to the cell phones of the maintenance personnel as text messages by means of additional modules (e.g. WinCC and Funkserver Pro). Timely evaluation of this data enables selective intervention in the process and prevents plant failures.

Maintenance

Information for preventive maintenance (e.g. number of switching cycles or operating hours) enables timely planning of personnel and material. This increases the level of plant availability. Destruction of sensitive system components due to failures is prevented. Communication helps to provide specific information about the location and cause of power failures. Recording of phase currents allows precise determination of the cause of the fault (e.g. triggered by short circuit of 2317 A in phase L2 on 27.08.2007 at 14:27). This is the basis for fast correction of the fault and creates a significant potential for cost savings.

Statistics and cost-effectiveness

Recording of power, energy and the power factor cos φ opens up further possibilities. Energy profiles can be created and the costs can be clearly allocated thanks to the transparent representation of energy consumption for business administration analysis. Energy costs can later be optimized by compensating for load peaks and troughs.

Modular and intelligent

The SENTRON circuit breaker program consists of a small number of components with a host of combination options, and it encompasses a performance range from 16 A to 6300 A. The versatility in power distribution achieved by this modularity enables low-cost, flexible integration of the SENTRON circuit breakers into higher-level system solutions using communication.

Saving costs

The benefits of the SENTRON circuit breakers result both from their modular design and compact construction. This saves costs for work processes in planning and trade, and for switchgear manufacturers and plant operators. It also saves space and energy.

Easy planning

This results from the use of the SENTRON circuit breakers and the SIMARIS deSign planning tool, which enables the solution of previously tedious and difficult processes, primarily for planning offices but also for control cabinet builders.

System solutions

Embedding of the SENTRON circuit breakers into a higher-level communication system makes it possible to parameterize the circuit breakers via Modbus RTU, PROFIBUS DP, Ethernet or the Internet, or to optimize the entire power distribution system by means of an integrated power management system (e.g. powermanager).

1.2 Bus systems

Bus systems are used to connect distributed devices with various levels of intelligence. Bus systems differ in their topologies and mechanisms, with some designed for quite specific application cases, and others aimed more at open applications.

Bus systems in automation

The most important bus systems in the areas of automation and power distribution are described below:

- PROFIBUS DP
- Ethernet
- Modbus RTU

1.2.1 Modbus RTU

Definition/standard

Modbus RTU is an open, serial communication protocol based on the master-slave architecture. It can be implemented extremely easily on any serial interfaces. Modbus RTU comprises one master and several slaves, with communication controlled exclusively by the master.

Communication

Modbus RTU has two fundamental communication mechanisms:

- Query/response (Polling): The master sends a request frame to any station and expects a response frame.
- Broadcast: The master sends a command to all stations on the network. These execute the command without acknowledgment.

Message frames

The message frames allow process data (input/output data) to be written or read either individually or in groups.

Modbus RTU is used on different transmission media. Implementation on the RS485 physical bus, a shielded, twisted-pair cable with terminating resistors, is widespread.

Applications

The Modbus RTU protocol is used for:

- Networking of controllers
- Linking input/output modules

Use of Modbus RTU is recommended above all for applications with:

- Low time requirements

1.2.2 Ethernet

Definition/standard

Industrial Ethernet is a powerful cell network in accordance with the IEE 802.3 (ETHERNET) standard. Transfer rates up to 1 Gbit/s in conjunction with "Switching Full Duplex" and "Autosensing" make it possible to adapt the required power in the system to the prevailing requirements. The data rate can be selected to suit particular needs, as integrated compatibility makes it possible to introduce the technology in stages. With a current market share of over 80%, Ethernet is the most frequently used LAN in the world.

The benefits of Ethernet are as follows:

- Ethernet is especially suitable for harsh industrial environments subject to electromagnetic interference.
- With the new technology of the Internet, Ethernet offers diverse options for global networking.
- With Industrial Ethernet, SIMATIC NET ® offers the means of using intranets, extranets and the Internet - already available in the office area - in EMI-polluted production processes and process automation.

Communication between peers

Ethernet is not designed on the master-slave principle like PROFIBUS DP or Modbus RTU. All nodes are equal peers on the bus and each can transmit and/or receive.

A sender can only start transmitting on the bus if no other node is transmitting at that moment. This is implemented by having each node "listen in" to determine if message frames are addressed to it or if there is currently no active sender. If a sender has started transmitting, the transmitted frame is checked for corruption. If the frame is not modified, transmission is continued.

If the sender detects corruption in its data, another sender must have started before it, and both nodes terminate transmission. The sender restarts transmission again after a random time.

This access procedure is called CSMA/CD. This "random" access procedure cannot guarantee that a reply is sent within a specific time period. That depends heavily on the bus traffic load. For this reason, it is not possible to implement real-time applications with Ethernet.

Data transfer

There are several methods of transferring the data of the SENTRON circuit breakers on PROFIBUS DP or Modbus RTU to Ethernet. These are represented here by two solutions using SIEMENS components:

Solution 1	A SIMATIC S7 controller is equipped with a PROFIBUS DP or Modbus RTU interface (CPU-internal interface or modules with communications processors) and an Ethernet interface. The data transferred by the circuit breakers over PROFIBUS DP or Modbus RTU is "re-sorted" in the SIMATIC and communicated via Ethernet. The CP 343-1, CP 343-1 IT, CP 343-1 PN, CP 443-1 and CP 443-1 IT are available as possible Ethernet communications processors for the S7.
Solution 2	As an autonomous component, the IE/PB link forms the seamless transition between Industrial Ethernet and PROFIBUS DP.
Solution 3	A 7KM PAC4200 Power Monitoring Device as a gateway (see the Chapter Gateway in TCP / IP networks (Page 145))

Ordering information

Ordering information and further gateway options can be found in the Catalog "Industrial Communication" (IK PI) Chapter 8.

1.2.3 PROFIBUS DP

Definition/standard

PROFIBUS DP is an open, standardized and multi-vendor fieldbus system. It is standardized in compliance with IEC 61158/EN 50170 and is thus the ideal basis for the high data exchange requirements in the area of distributed I/O and field devices. To-date (July 2007), more than 1,100 manufacturers offer in excess of 1,700 products and the user organizations in 23 countries support the users of more than 4 million installed PROFIBUS nodes.

Integration into automation systems

Integration and linking to current concepts in automation is similarly unproblematic since all the large manufacturers offer PROFIBUS DP master modules for programmable logic controllers (PLCs). And with high data transfer rates of up to 12 MBaud/s, the systems operate almost in real time.

Master-master communication

The protocol used for PROFIBUS DP node communication ensures communication between the complex automation devices with equal priority (masters). Each node completes its communication tasks within a fixed time frame.

Master-slave communication (token-passing procedure)

Furthermore, simple cyclic data exchange is used for communication between a master and the simple I/O devices (slaves) assigned to it. PROFIBUS DP uses a hybrid bus access control for this comprising a central token-passing procedure between the active bus nodes (masters) and a central master-slave procedure for data exchange between the active and passive bus nodes.

System configuration

The following system configurations can be implemented with this bus access control:

- Pure master-slave system
- Pure master-master system with token passing
- A combination of both systems

The following figure shows communication on PROFIBUS:

- Token passing between the available masters
- Polling between master and slave nodes

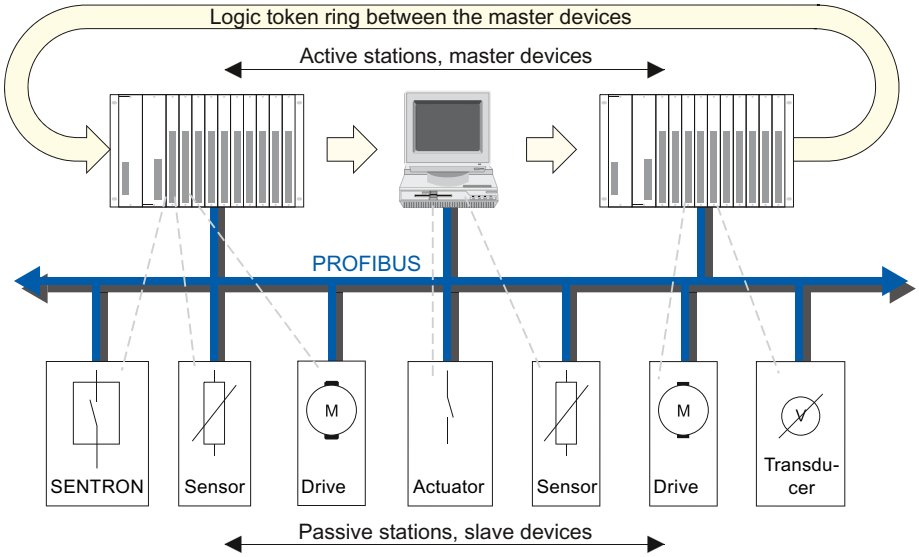

Figure 1-1 Communication on PROFIBUS

The figure above shows an example with three master modules and seven slaves. The three master devices form a logical ring. The token is controlled by the MAC (media access control). It generates the token in the startup phase and checks if actually only one token circulates in the logical ring.

Master classes

Each slave that communicates cyclically via PROFIBUS DP is assigned to a class 1 master. Cyclic data traffic takes place in accordance with the DP standard profile (DPV0).

Master class 1 A class 1 master is used primarily for performing automation tasks. In addition to cyclic data exchange, a class 1 master can also establish an acyclic communication connection with its slaves and thus make use of the expanded functions of a slave.

Master class 2 A class 2 master is especially suitable for commissioning, diagnostics and visualization tasks. It is connected to PROFIBUS DP in addition to the class 1 master and can access slaves via acyclic services and exchange data, provided the slaves permit it.

Acyclic data transfer

Acyclic data transfer is implemented via DPV1. DPV1/DPV2 adds several functions to the existing PROFIBUS standard for this purpose. These include reparameterization of the slave configuration during operation, and the establishment of acyclic data traffic. With the help of DPV1, data can also be read direct from the slave by a class 2 master, even though it still has a logical link to a class 1 master. In physical terms, DPV1 transfer and DP standard transfer take place over one line.

Acyclic data transfer is used, for example, in conjunction with operator control and monitoring systems such as WinCC or configuration software like Switch ES Power. The PC used here with built-in PROFIBUS DP interface card then handles the function as a class 2 master. From there, the data sets are transferred via DPV1 and the new values are set, e.g. in the case of changing the value for the tripping current. However, cyclic data exchange between the circuit breaker and the PLC continues.

1.2.4 Communication structure of the SENTRON circuit breakers

The figure below provides an overview of the communication options of the SENTRON circuit breakers and their modules.

Modbus RTU

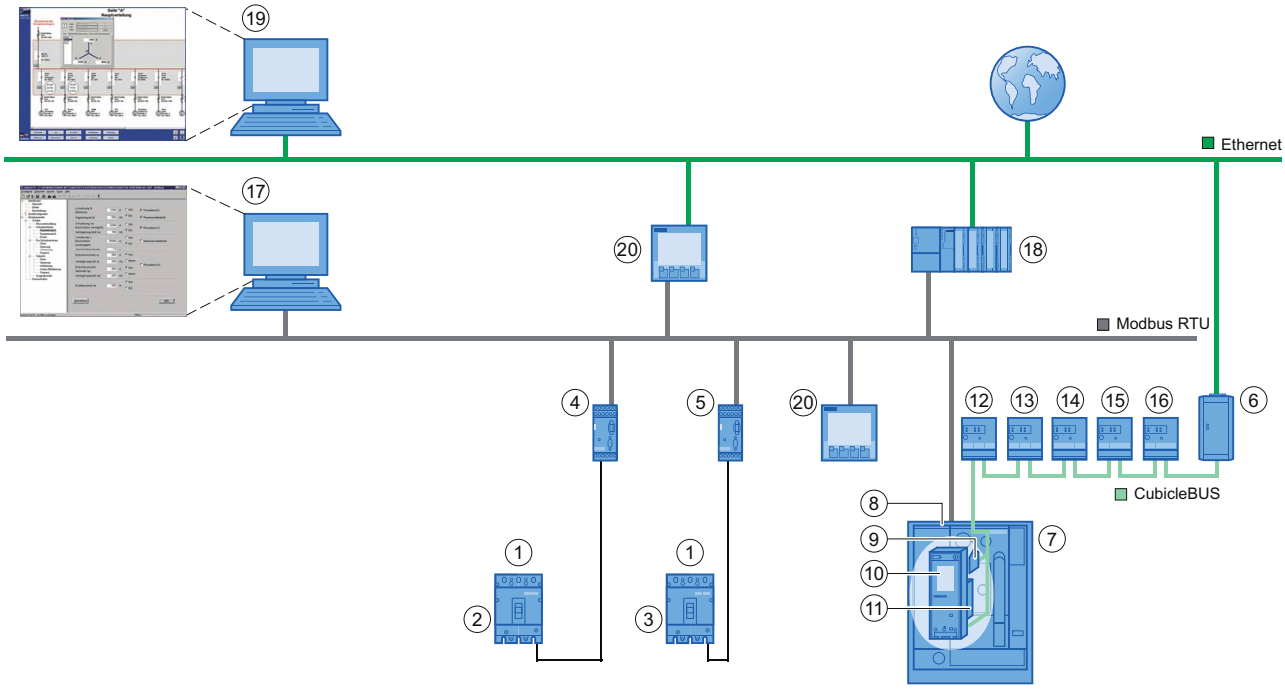

① 3VL molded-case circuit breaker
② Electronic trip unit LCD ETU
③ Electronic trip unit ETU
④ COM21 Modbus RTU from Release 2 - including ZSI
⑤ COM21 Modbus RTU - including ZSI
⑥ BDA PLUS with Ethernet interface
⑦ 3WL air circuit breaker
⑧ COM16 Modbus RTU
⑨ Breaker Status Sensor (BSS)
⑩ Electronic trip unit ETU
⑪ Metering function PLUS
⑫ ZSI module
⑬ Digital output module with relay contacts
⑭ Digital output module with relay contacts, configurable
⑮ Analog output module
⑯ Digital input module
⑰ Software tool, e.g. *powerconfig* from V2.2 on PC
⑱ PLC, e.g. SIMATIC S7
⑲ HMI, e.g. *powermanager*
⑳ 7KM PAC Power Monitoring Devices

Figure 1-2 System architecture of the SENTRON circuit breakers - Modbus RTU

General information 2

2.1 Other system manuals and literature

Sources of information and other documentation

The following manuals supplement the present manual:

Operating Instructions of the SENTRON WL circuit breaker	3ZX1812-0WL00-0AN1
System manual for the SENTRON VL circuit breaker	3ZX1012-0VL10-0AB1
System manual for 3WL/3VL circuit breakers with communication capability - PROFIBUS	A5E01051347-02

2.2 Approvals

The SENTRON product range complies with the following directives:

- Low Voltage Directive 2006/95/EC
- EMC Directive 2004/108/EC
- Underwriters Laboratories, Inc.: UL 508 registered (Industrial Control Equipment)
- Canadian Standards Association: CSA C22.2 Number 142, tested (Process Control Equipment)

2.3 Standards and approvals

The SENTRON series is based on the IEC 60947-2 standard. PROFIBUS DP meets all the requirements and criteria of IEC 61131, Part 2, and the requirements for CE marking. 3VL/3WL have CSA and UL approvals.

The SENTRON VL/WL circuit breakers comply with the standards:

- IEC 60947-1, EN 60947-1
- DIN VDE 0660, Part 100
- IEC 60947-2, EN 60947-2
- DIN VDE 0660, Part 101
- Isolating features in accordance with IEC 60947-2, EN 60947-2

2.4 Orientation aids

The manual contains various features supporting quick access to specific information:

- At the beginning of the manual you will find a table of contents.
- The chapters contain subheadings that provide an overview of the content of the section.
- Following the appendices, a glossary defines important technical terms used in the manual.
- Finally, a comprehensive index allows quick access to information on specific subjects.

2.5 Up-to-the-minute information at all times

Your regional contact for low-voltage switchgear with communication capability will be happy to help you with any queries you have regarding the SENTRON series. A list of contacts and the latest version of the manual are available on the Internet at:
SENTRON (http://www.siemens.com/sentron)

2.6 Scope

This manual applies to circuit breakers with the following designations:

SENTRON

- VL160 to VL1600
- VL150 UL to VL1600 UL
- 3WL1, 3WL2, 3WL3 and 3WL5

Disclaimer of liability

The products described here were developed to perform safety-oriented functions as part of an overall installation or machine. A complete safety-oriented system generally features sensors, evaluation units, signaling units, and reliable shutdown concepts. It is the responsibility of the manufacturer to ensure that a system or machine is functioning properly as a whole. Siemens AG, its regional offices, and associated companies (hereinafter referred to as "Siemens") cannot guarantee all the properties of a whole plant or machine that has not been designed by Siemens.

Nor can Siemens assume liability for recommendations that appear or are implied in the following description. No new guarantee, warranty, or liability claims beyond the scope of the Siemens general terms of supply are to be derived or inferred from the following description.

Up-to-the-minute information

You can find further assistance on the

Internet at: Technical support (http://www.siemens.com/lowvoltage/technical-support)

SENTRON WL 3

3.1 Introduction and overview

3.1.1 The CubicleBUS

Within the integrated and modular architecture of the SENTRON WL, the CubicleBUS connects all intelligent components within the SENTRON WL and enables simple and safe connection of other external additional components. The CubicleBUS is already prepared in all complete circuit breakers with the trip units ETU45B / ETU745 / ETU748 and ETU76B / ETU776 (CubicleBUS integrated).

Retrofitting components

The high modularity of the system allows retrofitting of communication functions (e.g. metering function) at any time. Retrofitting of a SENTRON WL that does not yet have communication capability is also possible on-site in the plant. All modules on the CubicleBUS can access the available source data of the circuit breaker direct and thus ensure extremely high-speed access to information.

In addition, the connection of external add-on modules to CubicleBUS allows low-cost solutions for connecting further communication-capable devices in the switching station.

3.1.2 Communications capability of electronic trip units (ETU)

The electronic trip units ETU45B / ETU745 / ETU748 and ETU76B / ETU776 are all capable of communication. The CubicleBUS is brought out at the terminals X8:1 to X8:4 in the circuit breaker.

Versions

The communication-capable trip units differ in their design:

- The ETU45B / ETU745 / ETU748 has a rotary coding switch on the front for setting the protection parameters. These can only be read via the communication system.
- Optionally, the ETU45B / ETU745 / ETU748 can be equipped with a four-line display for showing the measured values.
- The ETU76B / ETU776 offers a pixel-graphics display with a clear, key-operated menu. This display can be used not only to show measured values, status information and maintenance information, but also to read all available parameters and modify them with password protection.

Tripping system

The table below provides an overview of the functions and options of the communication-capable trip units ETU45B / ETU745 / ETU748 and ETU76B / ETU776.

3.1.3 Function overview of the overcurrent tripping system

Table 3- 1 Function overview of the tripping system of the IEC ETUs

Basic function		ETU45B	ETU76B
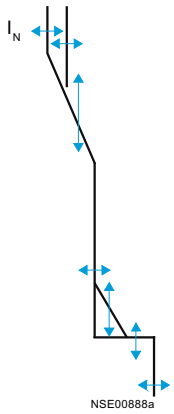	Overload protection	✓	✓
	Function can be switched on/off	–	✓
	Adjustment range $I_R = I_n \times$ ...	0.4_0,45_0,5_0,55_0.6 0.65_0,7_0,8_0,9_1	0.4...1
	Switchable overload protection (I^2t or I^4t-dependent function)	✓	✓
	Adjustment range time-lag class t_R at 6 × I_R for I^2t	2_3.5_5.5_8_10_14_1_21_2530 s	2...30 s
	Adjustment range time-lag class t_R at 6 × I_R for I^4t	1-2-3-4-5 s	1...5 s
	Thermal memory can be switched on/off	✓	✓
	Phase loss sensitivity	at t_{sd} = 20 ms (M)	✓ (on/off)
	N-conductor protection	✓	✓
	Function can be switched on/off	✓	✓
	N-conductor adjustment range $I_N = I_n \times$ ...	0.5...1	0.2...2
	Short-time delayed short-circuit protection	✓	✓
	Function can be switched on/off	✓	✓
	Adjustment range $I_{sd} = I_n \times$ ...	1.25_1,5_2_2,5_3_4_6_8_10_12	1.25 x I_n...0.8 x I_{cw}
	Adjustment range delay time t_{sd}	M-100-200-300-400 ms	M-80...4000 ms
	Switchable short-time delayed short-circuit protection (I^2t-dependent function)	✓	✓
	Adjustment range delay time t_{sd} at I^2t	100-200-300-400 ms	100...400 ms
	ZSI function	Via CubicleBUS module	Via CubicleBUS module
	Instantaneous short-circuit protection	✓	✓
	Function can be switched on/off	✓	✓
	Adjustment range $I_i = I_n \times$ ...	1.5_2.2_3_4_6_8_10_12 x I_{cs}	1.5 x I_n...0.8 x I_{cs}
	Ground-fault protection	Retrofittable module	Retrofittable module
	Tripping and alarm functions	✓	✓
	Tripping function can be switched on/off	✓	✓
	Alarm function can be switched on/off	–	✓

Basic function		ETU45B	ETU76B
NSE00889	Recording of the ground-fault current via summation current conversion with internal or external N-conductor transformer	✓	✓
	Recording of the ground-fault current via external transformer	✓	✓
	Adjustment range of the response current I_g for tripping	A-B-C-D-E	A...E*
	Adjustment range of the response current I_g for alarm	A-B-C-D-E	A...E*
	Adjustment range of the delay time t_g	100-200-300-400-500 ms	100...500 ms
	Switchable ground-fault protection (I^2t-dependent function)	✓	✓
	Adjustment range delay time t_g at I^2t	100-200-300-400-500 ms	100...500 ms
	ZSI-G function	Via CubicleBUS module	Via CubicleBUS module
	Switchable	–	✓
	LCD alphanumeric (4-line)	Optional	–
	LCD graphical	–	✓
	CubicleBUS integrated	✓	✓
	Communication capability	✓	✓
	Metering function capability with metering function PLUS	✓	✓
NSE00890	Overcurrent release active	✓	✓
	Alarm	✓	✓
	ETU fault	✓	✓
	L tripping operation	✓	✓
	S tripping operation	✓	✓
	I tripping operation	✓	✓
	N tripping operation	✓	✓
	G tripping operation	✓ (only with ground-fault protection module)	✓ (only with ground-fault protection module)
	G alarm	✓ (only with ground-fault protection module)	✓ (only with ground-fault protection module)
	Tripping operation as a result of extended protection function	✓	✓
	Communication	✓	✓

Basic function		ETU45B	ETU76B
NSE00891	Load pick up	✓	✓
	Load shedding	✓	✓
	Leading signal overload trip 200 ms	✓	✓
	Temperature alarm	✓	✓
	Phase unbalance	✓	✓
	Instantaneous short-circuit trip	✓	✓
	Short-time delayed short-circuit trip	✓	✓
	Overload trip	✓	✓
	Neutral conductor trip	✓	✓
	Ground-fault protection trip	✓ (only with ground-fault protection module)	✓ (only with ground-fault protection module)
	Ground-fault alarm	✓ (only with ground-fault protection module)	✓ (only with ground-fault protection module)
	Auxiliary relay	✓	✓
	ETU fault	✓	✓

* **Set values for Ig**

Size I/II

A 100 A

B 300 A

C 600 A

D 900 A

E 1200 A

Size III

A 400 A

B 600 A

C 800 A

D 1000 A

E 1200 A

Table 3- 2 Function overview of the tripping system of the UL-ETUs

Basic function		ETU745 / ETU748		ETU776
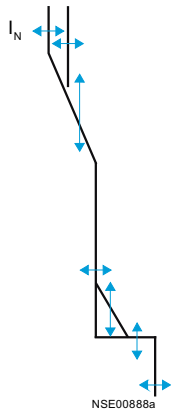	Overload protection	✓		✓
	Function can be switched on/off	–		–
	Adjustment range $I_R = I_n \times$ ...	0.4_0,45_0,5_0,55_0,6-0.65_ 0,7_0,8_0,9_1		0.4...1 (increment: 1A)
	Switchable overload protection (I^2t or I^4t-dependent function)	✓		✓
	Adjustment range time-lag class t_R at 6 × I_R for I^2t	2_3,5_5,5_8_10_ 14_17_21_25_30		2_..._30 (increment: 0.1s)
	Adjustment range time-lag class t_R at 6 × I_R for I^4t	1_2_3_4_5		1_..._5 (increment: 0.1s)
	Thermal memory can be switched on/off	✓ (via slide switch)		✓ (via keypad or communication)
	Phase loss sensitivity	at t_{sd} = 20 ms (M)		✓ (via keypad or communication)
	N-conductor protection	✓		✓
	Function can be switched on/off	✓ (via slide switch)		✓ (via slide switch)
	N-conductor adjustment range $I_N = I_n \times$ ...	0.5...1		0.5...1
	Short-time delayed short-circuit protection	✓		✓
	Function can be switched on/off	✓ (via rotary switch)		✓ (via keypad or communication)
	Adjustment range $I_{sd} = I_n \times$ ...	1.25_1,5_2_2,5_3_4_6_8_10_12		1.25_..._0.8 x I_{cw} = max. (increment: 10 A)
	Adjustment range delay time t_{sd} at I^2d (s)	0.02 (M)_0.1_0.2_ 0.3_0.4_OFF	0.02 (M)_0.1_0.2_0.3_0.4	M_0.08_..._0.4_OFF (increment: 0.001s)
	Switchable short-time delayed short-circuit protection (I^2t-dependent function)	✓ (via rotary switch)		✓ (via keypad or communication)
	Adjustment range delay time t_{sd} at I^2t	0.1_0,2_0,3_0.4		0.1_..._0,4 (increment: 0.001s)
	ZSI function	Via CubicleBUS module		Via CubicleBUS module
	Instantaneous short-circuit protection	✓	—	✓
	Function can be switched on/off	✓ (via rotary switch)	—	✓ (via keypad or communication)
	Adjustment range $I_i = I_n \times$ ...	1.5_2,2_3_4_6 _8_10_12 0.8 x I_{cw} = max., OFF = I_{cw}	—	1.5 x I_n...0.8 x I_{cs} = max., OFF = I_{cw}
	Ground-fault protection[2]	Retrofittable module		Retrofittable module
	Tripping and alarm functions	✓		✓
	Tripping function can be switched on/off			
	Alarm function can be switched on/off			

Basic function		ETU745 / ETU748	ETU776
NSE00889	Recording of the ground-fault current via summation current conversion with internal or external N-conductor transformer	✓	✓
	Recording of the ground-fault current via external transformer		
	Adjustment range of the response current I_g for tripping	A-B-C-D-E	A...E (increment: 1 A)
	Adjustment range of the response current I_g for alarm	A-B-C-D-E	A...E (increment: 1 A
	Adjustment range of the delay time t_g	100-200-300-400-500 ms	100...500 ms (increment: 0.001s)
	Switchable ground-fault protection (I^2t-dependent function)	✓	✓
	Adjustment range delay time t_g at I^2t	100-200-300-400-500 ms	100...500 ms (increment: 0.001s)
	ZSI-G function	Via CubicleBUS module	Via CubicleBUS module
	Switchable	–	✓
	LCD alphanumeric (4-line)	Optional	–
	LCD graphical	–	✓
	CubicleBUS integrated	✓	✓
	Communication capability	✓	✓
	Metering function capability with metering function PLUS	✓	✓
NSE00890	Overcurrent release active	✓	✓
	Alarm	✓	✓
	ETU fault	✓	✓
	L tripping operation	✓	✓
	S tripping operation	✓	✓
	I tripping operation	✓	✓
	N tripping operation	✓	✓
	G tripping operation	✓ (only with ground-fault protection module)	✓ (only with ground-fault protection module)
	G alarm	✓ (only with ground-fault protection module)	✓ (only with ground-fault protection module)
	Tripping operation as a result of extended protection function	✓	✓
	Communication	✓	✓

Basic function		ETU745 / ETU748	ETU776
NSE00891	Load pick up	✓	✓
	Load shedding	✓	✓
	Leading signal overload trip 200 ms	✓	✓
	Temperature alarm	✓	✓
	Phase unbalance	✓	✓
	Instantaneous short-circuit trip	✓	✓
	Short-time delayed short-circuit trip	✓	✓
	Overload trip	✓	✓
	Neutral conductor trip	✓	✓
	Ground-fault protection trip	✓ (only with ground-fault protection module)	✓ (only with ground-fault protection module)
	Ground-fault alarm	✓ (only with ground-fault protection module)	✓ (only with ground-fault protection module)
	Auxiliary relay	✓	✓
	ETU fault	✓	✓

[1] With the setting Ii = Off = IEP the circuit breaker can be used even at the maximum short-circuit breaking capacity and above.

[2] Once it has been installed, the ground-fault protection module cannot be uninstalled.

3.1.4 Availability of the data on the CubicleBUS

Data library

Each data point from the data library of the SENTRON circuit breakers can only be generated by a single module, the data source. If this data source (node) is available, the data points assigned to the data source will also be available.

This availability is described and also communicated in the "property bytes". If a data source (node) is not available, the data point will also not exist. This can also be seen in the associated property byte. Chapter Data library (Page 157) provides a precise description of the individual data points.

Data point groups

The table below provides an overview of the internal CubicleBUS nodes and their assigned data point groups (combination of several data points). The table below shows which data points from the data library are generated by which CubicleBUS module:

Table 3- 3 Assignment of data points to CubicleBUS modules

Data point group Data points with the same source	CubicleBUS nodes			
	ETU from ETU45B / ETU745	BSS	COM16	Metering function PLUS
Protection parameter set A	✓			
Protection parameter set B (not for ETU45B / ETU745)	✓			
Extended protection parameters				✓
Parameters for threshold values				✓
Communication parameters			✓	
Parameters for setting measured values				✓
Data for device identification	✓		✓	
Switch position information			✓	
Status information (switch on/off, spring energy store, etc.)		✓		
Alarms	✓			
Tripping operations	✓			✓
Threshold value messages				✓
Maintenance information	✓		✓	
Temperature in circuit breaker		✓		
Temperature in the control cabinet			✓	
3-phase currents	✓			
Current in N-conductor, ground-fault current; depending on equipment	✓			
3-phase voltages				✓
Power P, Q, S, energy				✓
Cos φ				✓
Frequency, total harmonic distortion, form factor, peak factor				✓
Harmonic analysis				✓
Waveform buffer				✓
Logbook for events and tripping operations			✓	
System time			✓	

3.1.5 Brief description of SENTRON WL

As well as the traditional tasks of circuit breakers, the protection of plants,

transformers, generators and motors, additional requirements

have been added:

- A complete overview of the plant from a central control room is required
- All the information must be available at all times

Networking of the breakers with each other and with other components is the

defining feature of a modern power distribution system. The 3WL family of air circuit breakers

also offers:

- Remote diagnostics and service over the Internet
- Operating personnel is informed in good time of faults in the plant

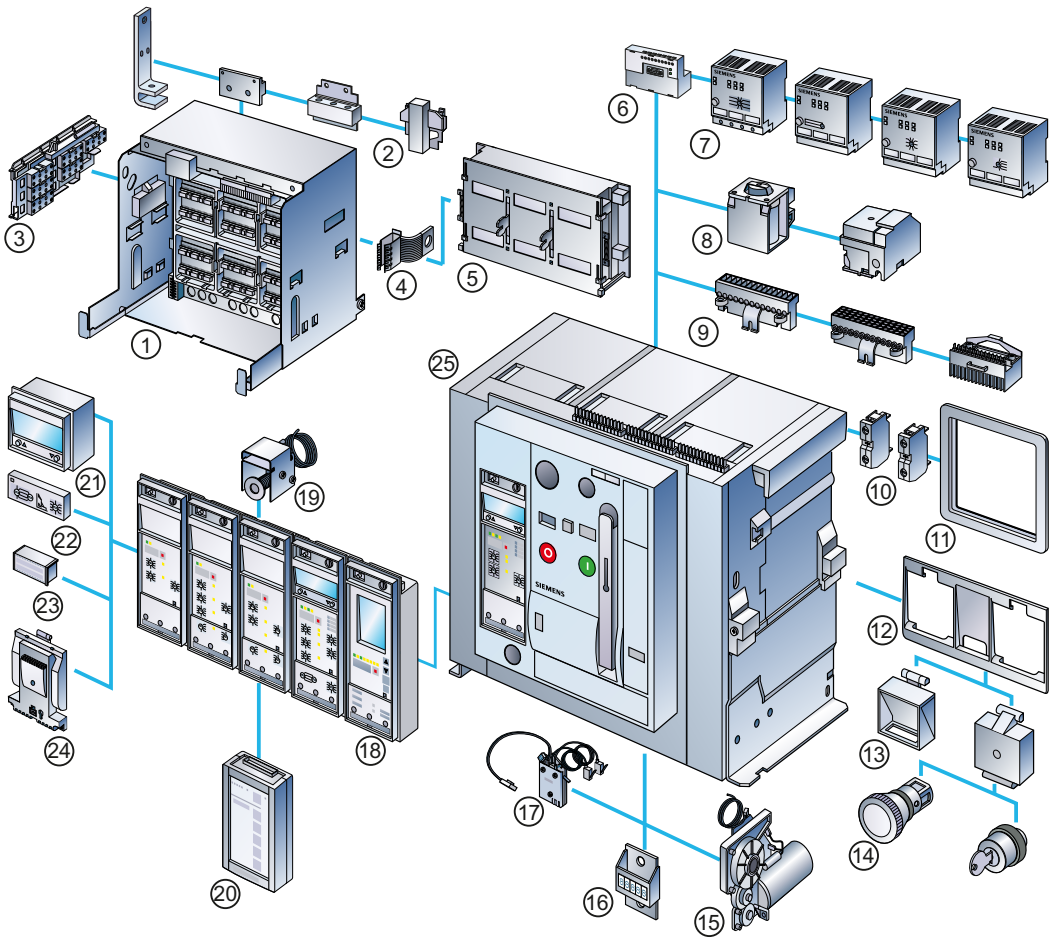

① Guide frame
② Main front terminal, flange, horizontal, vertical
③ Position signaling switch
④ Grounding contact, leading
⑤ Shutters
⑥ COM16 Modbus RTU module
⑦ External CubicleBUS modules
⑧ Switch-on solenoid, auxiliary release
⑨ Auxiliary conductor plug-in system
⑩ Auxiliary switch block
⑪ Door sealing frame
⑫ Locking set base plate
⑬ Transparent insert, function insert
⑭ Key-operated EMERGENCY STOP pushbutton
⑮ Motorized operating mechanism
⑯ Switching cycles counter
⑰ Breaker Status Sensor (BSS)
⑱ Overcurrent release (ETU)
⑲ Reset solenoid
⑳ Breaker Data Adapter PLUS (BDA PLUS)
㉑ Four-line LCD module
㉒ Ground-fault protection module
㉓ Rated current module
㉔ Metering function module
㉕ 3WL air circuit breaker

Figure 3-1 SENTRON WL, accessories

Sizes and versions

- With three sizes, the 3WL air circuit breaker covers the range from 250 A to 6300 A.
- The 3WL is available in a three-pole and four-pole version.
- There is a fixed-mounted 3WL circuit breaker version, and a withdrawable version.
- The devices are available in different switching capacity classes, so short-circuit currents up to 150 kA can be safely shut down.

Adaptation

The 3WL air circuit breaker can be adapted to prevailing plant conditions. Each circuit breaker can be set to the suitable rated current, for example, using a rated current module. This ensures optimal protection characteristics even when the plant is modified. The module can be replaced quickly. Time-consuming replacement of the transformer is not necessary.

Parameter set switchover (ETU76B / ETU776)

It is possible to switch between two different parameter sets. This function is necessary, for example, if an automatic change is made from mains operation to generator operation in the event of a power failure and there is the possibility of all tripping conditions changing.

Safety

It is possible to prevent undesired switching on by means of interlocks and locking options on the switch.

Example

The accessories, from the auxiliary release, motorized operating mechanism all the way to the communication system, are simple and easy to retrofit. The accessories are the same across the entire range. This simplifies ordering and reduces stockkeeping costs.

Solid-state overcurrent trip unit (ETU)

The core of each switch is the solid-state overcurrent trip unit (ETU). There are different options for adapting the protection functions, metering functions, and signaling functions to the requirements of the plant: From simple overload protection and short-circuit protection, up to trip units with a host of metering and signaling functions that can be parameterized remotely.

Communication capability

All circuit breakers with trip units of the type ETU45B / ETU745, ETU748 and ETU76B / ETU776 have communication capability. Additional components that are networked internally via the CubicleBUS can be installed in these communication-capable trip units. To confer communication capability on a SENTRON WL with the ETU15B or ETU25B / ETU725 or ETU27B / ETU727 trip unit, the overcurrent release must be replaced as these trip units have no facility for connecting to the CubicleBUS.

Connection

The circuit breaker is connected to Modbus RTU via the RS485 interface of the COM16 module. It is possible to run networking/communication at a higher level as a Web site (intranet/Internet) using the Breaker Data Adapter PLUS. Communication can also be implemented with the Modbus protocol on Ethernet using an appropriate gateway (e.g. PAC4200).

See also

powerconfig (Page 147)

3.2 COM16 and BSS module

3.2.1 COM16 Modbus RTU module

With the COM16, the SENTRON WL circuit breaker can exchange data via Modbus RTU. The COM16 fetches some of the most important information about the status of the breaker (on/off, spring energy store, ready, etc.) from the BSS (Breaker Status Sensor) via the CubicleBUS. This is why both modules are offered together as a Modbus RTU communication connection (option F12).

COM16 Modbus RTU module and BSS

COM16 for SENTRON WL allows you to connect the circuit breaker to Modbus RTU. It supports the Modbus RTU protocol.

Securing

It is possible to disable control/write access to the circuit breaker via hardware if this is necessary for security reasons, e.g. to prevent switching via Modbus RTU (manual/automatic mode) or to prevent the modification of parameters.

Integral clock

An integral clock adds a time stamp to all events such as minimum and maximum measured values, alarms, and tripping signals. This clock can be synchronized via Modbus RTU.

Temperature sensor

The COM16 has an integral temperature sensor that provides the temperature in the control cabinet thanks to its installation location outside the circuit breaker.

The BSS also contains a temperature sensor that shows the temperature in the breaker. Both sensors are factory-calibrated.

Detecting the switch position

The switch position (operating position, test position, disconnected position and not present) is detected by means of three built-in micro switches on the underside of COM16, and can be read out via Modbus RTU. The circuit breaker can only be switched on and off in the connected position and the test position.

3.2.2 Connection of the COM16 module

The COM16 is connected by plugging it into position X7 of the auxiliary conductor plug-in system.

Pin assignment

The figure below shows the label on the COM16, the external pin assignment for connecting the switch-on solenoid, the shunt release, Modbus RTU write protection, and the free input/output.

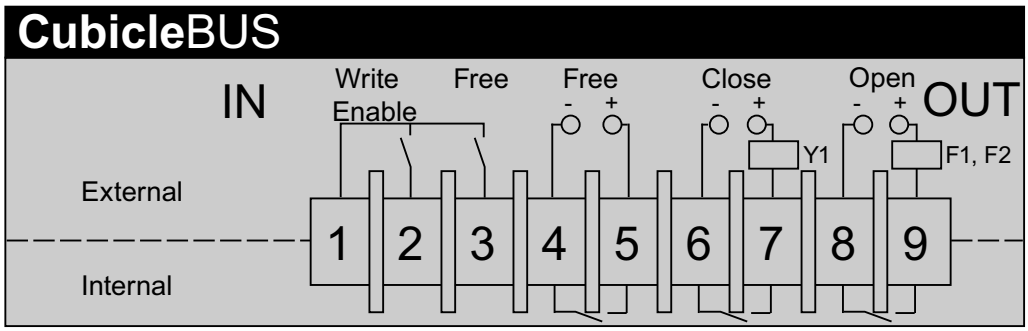

Figure 3-2 COM16 pin assignment

Electrical connection to the CubicleBUS

The electrical connection to the circuit breaker and the CubicleBUS connection to the CubicleBUS nodes inside the circuit breaker (ETU, BSS, metering function) must be established. For this purpose, the four lines brought out of the rear of COM16 are connected to section X8 of the auxiliary conductor plug-in system.

Further components and connections

- If the switch-on and switch-off solenoids are designed for higher voltages than 24 V DC, coupling relays must be used.
- If the second auxiliary trip unit (F2, F3, F4) is used instead of the first auxiliary trip unit (F1) to switch off via Modbus RTU, the connection points X5:11 and X5:12 must be used.
- Free operator output on COM16 (from Version 08/04; firmware version V1.13.0). From this version, the COM module offers an alternative function with which the status of the tripped signaling switch S45 of the BSS module is output at the operator output. A high level at the output means the circuit breaker has tripped. Switchover from the Modbus RTU "operator output" to the Modbus RTU "tripped signal" takes place via data point 19 (RB 93 word 5 high), with bit 4 (bit 4 to 1). Switchover to "operator output" takes place automatically by setting or resetting the operator output (RB 93 word 5 high bit 0 or bit 1).
- The CubicleBUS connection for RJ45 plugs to which the external CubicleBUS modules can be connected is located on the rear. If no external CubicleBUS module is connected, the terminating resistor supplied in the form of a RJ45 plug must be used.
- The unassigned user input can be connected via a contact element to the 24 V DC voltage from Pin1 to transmit the status of the contact element.
- The Modbus RTU line is connected to the 9-pin interface on the front of COM16.

Assignment of the SUB-D9 socket	
PIN1	Common
PIN5	B, Tx / Rx +
PIN9	A, Tx / Rx -

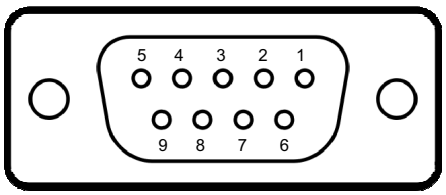

Figure 3-3 SUB-D9 socket

Connection of the COM16

The figure below shows how COM16 must be wired with the auxiliary current plug-in contacts to allow switching on/off via Modbus RTU. This figure only applies for contacts with 24 V DC!

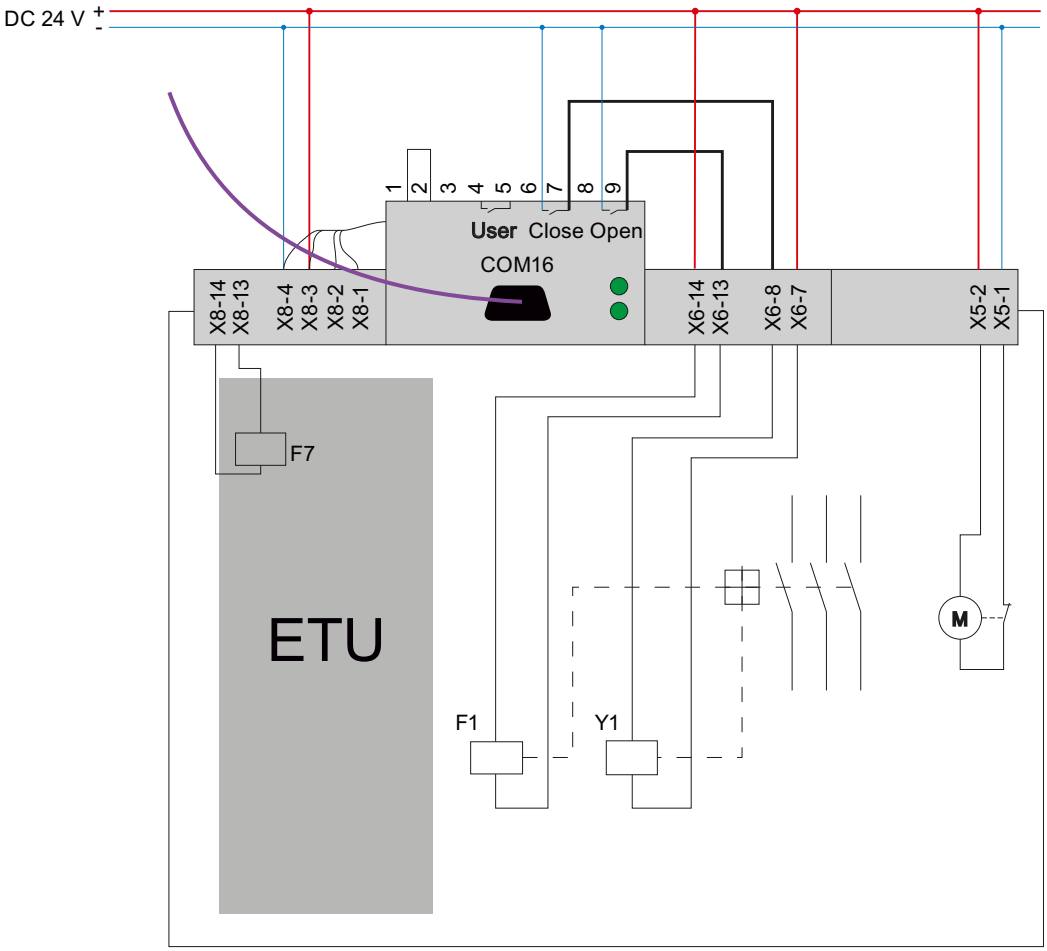

Figure 3-4 Wiring of COM16 at 24 V DC

The figure below shows the wiring if contacts are installed with voltages not equal to 24 V DC.

- Coupling relays must be used.
- If F1 is not used for switching off, the connection points X5:11 / X5:12 must be connected for F2 to F4.

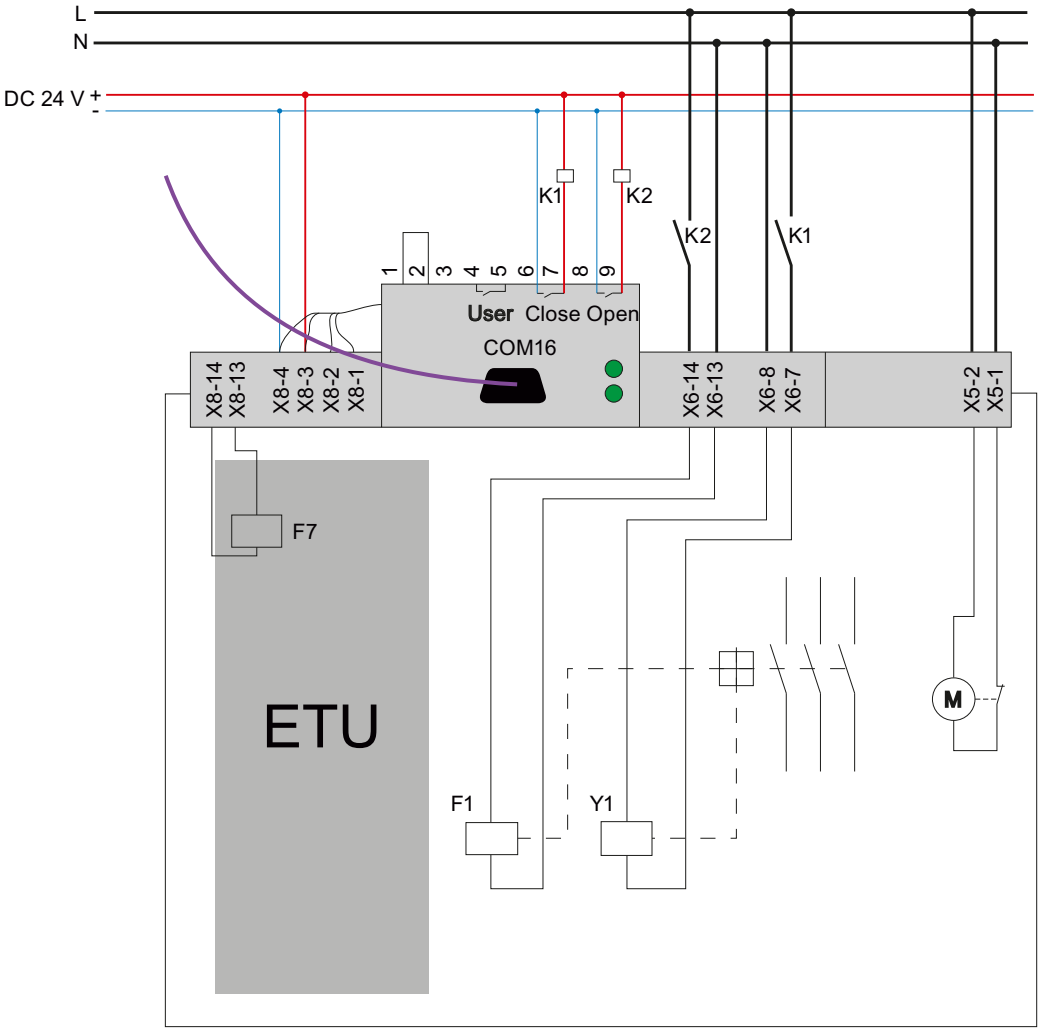

Figure 3-5 Wiring of COM16 at voltage not equal to 24 V DC

RJ45 connection

The figure below shows COM16 from behind. It shows the RJ45 connection for the external CubicleBUS modules. If no external CubicleBUS module is connected, the bus must be terminated with the terminating resistor supplied.

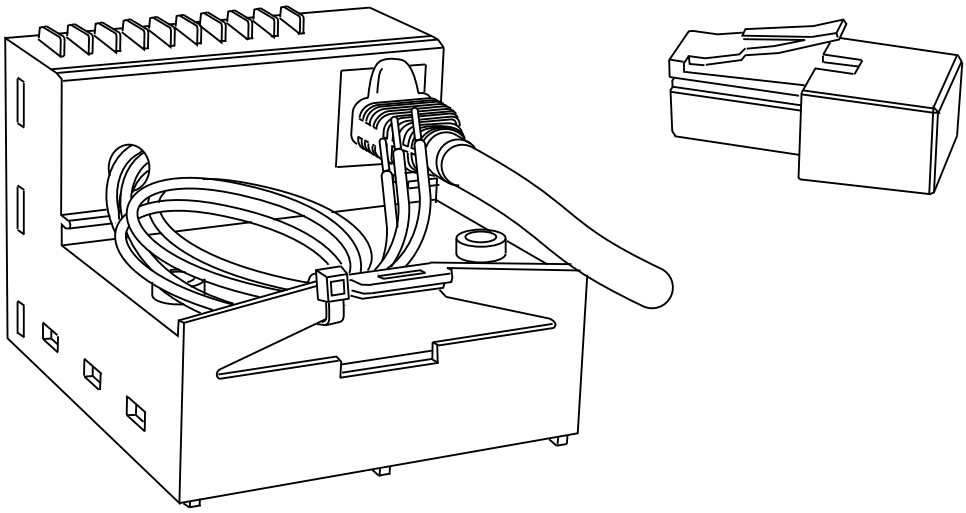

Figure 3-6 COM16 with RJ45 connection for CubicleBUS modules

Connection of the CubicleBUS nodes

The four black cables that are brought out of the COM16 must be connected to terminal strip X8. The COM16 is connected with the nodes on the CubicleBUS in the circuit breaker in this way.

Table 3- 4 Terminal strip connection X8 between COM16 and CubicleBUS nodes

Meaning	Position and printing on the cable
CubicleBUS -	X8:1
CubicleBUS +	X8:2
+24 V DC	X8:3
Ground 24 V DC	X8:4

3.2.3 Write protection (WriteEnable)

In applications in power distribution, it is necessary to disable write access via the COM module temporarily or permanently. There is a hardware input on the COM16 for this purpose. Pin1 provides the 24 V DC supply that can be run back via a contact to Pin 2 (WriteEnable), for example.

If this input is not bridged (that is, actively enabled), write access is not possible (with exceptions).

Without a bridge at the input of the write protection, the following actions will be disabled:

- Switching on or off
- Resetting the current tripping operation
- Changing the protection parameters
- Changing the parameters for the extended protection function (metering function)
- Changing the parameters for communication
- Changing the parameters for measured value setting (metering function)
- Resetting maintenance information (counter)

The following actions are still permitted in write-protect mode:

- Modifying and setting of trigger functions for the waveform buffer
- Reading out the contents of the waveform buffer
- Changing the parameters for threshold values
- Setting/modifying the system time
- Modifying the free texts (comment, plant identifier)
- Resetting the min./max. values
- Modifying the free user output

Transfer of necessary information

Despite the write protection, all the necessary information can be transferred, but the status of the circuit breaker cannot be changed.

This is reserved for the operator of the power distribution system. All non-disabled actions are used only for remote diagnostics and do not affect the current status. However, it is possible to diagnose tripping operations and waveforms more precisely, even remotely.

3.2.4 Data exchange via the COM16

When configuring the COM16 for data exchange, you must note that the COM16 is supplied as standard with the Modbus RTU address 126. This must be changed by the user when configuring the system (e.g. with *powerconfig* from Version 2.2, BDA PLUS, display of the ETU76B/ETU776).

Diagnosing the communication system

The COM16 has two LEDs labeled "MODBUS" and "CubicleBUS" for diagnosing communication. The operating status for Modbus RTU and the CubicleBUS can be read from these.

The figure below shows the front view of the Modbus RTU module of the SENTRON WL with the Modbus RTU connection and the two LEDs. The lower figure shows part of the ETU745 and its LEDs for status indication.

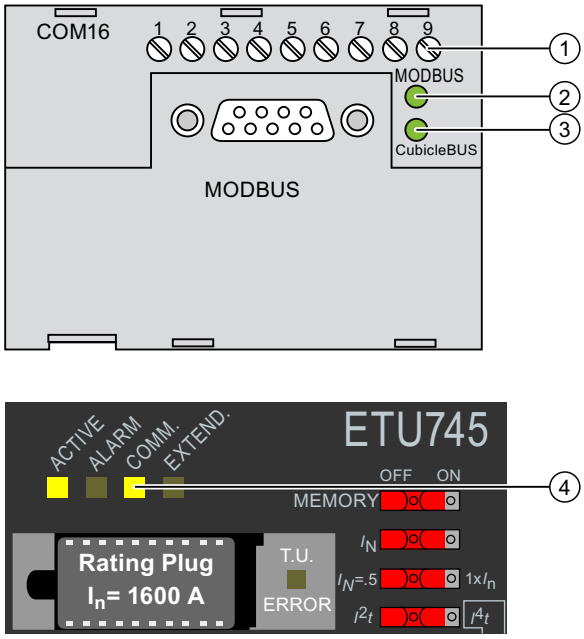

① Connecting terminals
② "MODBUS" LED
③ "CubicleBUS" LED
④ Communication LED on the trip unit

Figure 3-7 COM16 Modbus RTU module of the SENTRON WL and ETU745

"MODBUS" LED

The "MODBUS" LED shows the status of the Modbus RTU communication of the COM16 module.

Table 3- 5 "MODBUS" LED

"MODBUS" LED	Meaning
Off	No voltage on the COM16
Red	No Modbus RTU communication: No communication to the COM16 active or wait time for new communication elapsed
Green	Existing Modbus RTU communication: Valid Modbus RTU message frame detected and wait time for new communication not elapsed.

"CubicleBUS" LED

The "CubicleBUS" LED shows the status of the CubicleBUS communication of the COM16 module.

Table 3- 6 "CubicleBUS" LED

"CubicleBUS" LED	Meaning
Off	No CubicleBUS module found
Red	CubicleBUS fault
Flashing green	A CubicleBUS node has been found but no metering function/metering function PLUS, and no trip unit
Steady green light	CubicleBUS node found and connection with metering function/metering function PLUS, and/or trip unit

Two LEDs must be considered for assessing a functional CubicleBUS in the switch:

- The "COMM" LED on the trip unit must be green, that is, at least one other CubicleBUS node must be detected from the perspective of the trip unit.
  At the least, this is only the metering function/metering function PLUS, if the CubicleBUS has been subsequently interrupted.
- The CubicleBUS LED on the COM16 must then be considered. If this shows a steady green light, there is a connection from the COM16 at least to the metering function/metering function PLUS.
- If both LEDs show a green light (steady light from CubicleBUS on the COM16 module and "COMM" on the trip unit), there is continuous communication between the trip unit, the COM16 and Modbus RTU.

Data exchange via Modbus RTU

Data exchange then functions as follows:

- An up-to-date image of all the data of the SENTRON WL (with the exception of the waveform buffer) is always stored in the COM16 module. Consequently, a data query from the COM16 module to the PLC can be answered within just a few milliseconds.
- Write data from the PLC is forwarded to the correct addressee on the CubicleBUS.

Detecting the switch position

The COM16 module has three micro switches on the underside for determining the position of a slide-in circuit breaker in the guide frame. Depending on which switch is actuated, the position described above is communicated (1 = actuated). The table below gives the definition of the position on:

Table 3- 7 COM16, micro switch

Switch position	Rear switch (S46)	Middle switch (S47)	Front switch (S48)
Connected position	1	0	0
Test/check position	0	1	0
Disconnected position	0	0	1
Switch not present	0	0	0

When the circuit breaker is moved, the micro switch that has been actuated is released before the next one is actuated. No micro switch is actuated in the intervening period. As far as communication is concerned, this means that when the breaker is moved, the "old" status is communicated until a new defined status is reached.

Once the "disconnected position" micro switch has been released, there is no way of determining the direction in which the breaker is being moved.

If it is pushed in, the next position is the "test position". The COM16 communicates "disconnected position" for a further 10 s until the "test position" switch is actuated and only then "switch not present".

In the case of fixed-mounted circuit breakers, a counter plate is screwed to the COM16 and this transfers the connected position.

3.2.5 Breaker Status Sensor (BSS)

To display, for example, internal circuit breaker statuses on the control cabinet, or to read the statuses via Modbus RTU, a BSS module must be installed along with the necessary signaling switches. A requirement for this is that the circuit breaker has an electronic trip unit of the type ETU45B / ETU745 or higher. All micro switches that receive the information on the status of the circuit breaker are attached to the BSS or connected to it. The BSS makes this digital information available on the CubicleBUS.

Retrofitting

A SENTRON WL can also be retrofitted with the BSS. The BSS acquires the following information:

- Status of the spring energy store
- Position of the main contacts (switch on/off)
- Ready-to-close signaling
- Tripped signaling switch on the trip unit (connected with the red tripped plunger)
- Signaling switch on auxiliary trip unit
- Temperature in the circuit breaker dependent on the installation location in the switch (the sensor is calibrated at the factory)

Note

Ordering data

The BSS is already included in the order option "Z=F12" (Modbus RTU communication). If a BSS is desired without Modbus RTU communication (e.g. for operation of the BDA PLUS), this can be specified when ordering the switch with the option "Z=F01", or it can be ordered later as a spare part.

3.3 Metering functions

3.3.1 Metering function PLUS

The integral metering function PLUS can be operated with all trip units with CubicleBUS connection. It extends the protection functions of the trip unit and provides further warning thresholds and additional diagnostics options. With its extensive measured values, the integral metering function PLUS in SENTRON WL is a good alternative to the external power monitoring devices.

Metering function PLUS

The properties of the metering function PLUS are:

- In addition to the current values supplied by the trip unit, the metering function PLUS provides all the necessary measured values in power distribution (voltage, power, etc.) to enable power management.
- The metering function PLUS offers options for monitoring and protecting the connected power distribution system using the extended protection function (e.g. overvoltage).
- The possibility of generating warnings when adjustable thresholds are exceeded enables the very early response to plant faults or unusual plant statuses.
- Use of the metering function PLUS can increase plant availability.

The figure below shows that the metering function PLUS is mounted on the rear of the trip unit (ETU).

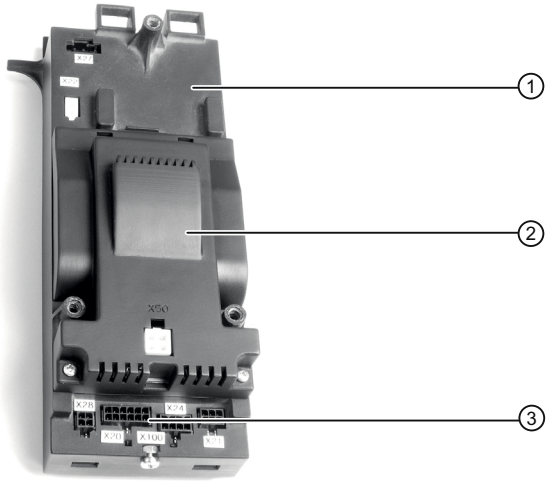

① Rear of the ETU
② Metering function PLUS
③ Connection for the breaker identification module

Figure 3-8 Metering function PLUS

Data exchange with trip unit

The trip unit and the metering function PLUS exchange all current data via a high-speed synchronous interface. The metering function PLUS provides all connected modules (e.g. COM16 or BDA PLUS) with the following data for further processing via the CubicleBUS:

- The parameters for the extended protection function
- The parameters for the threshold values
- The measured value settings
- The determined measured values

Mounting

The metering function PLUS can be operated with all switches with ETU45B / ETU745 and ETU76B / ETU776. If the metering function PLUS is ordered together with the circuit breaker using the short code "Z=F05", it is already built-in and ready for operation. The metering function PLUS can be retrofitted at any time if the switch is fitted with one of the above-listed trip units. The metering function PLUS is screwed onto the trip unit and the CubicleBUS cables are clicked into place.

NOTICE
If retrofitting is carried out by the customer, the metering function PLUS will not be calibrated together with the trip unit, that is, the accuracy information in the table "Metering function PLUS - Measured values for communication" cannot be guaranteed.

Harmonic analysis

The metering function PLUS samples the applied currents and the voltage, saves the measured values, and carries out a Fast Fourier Transformation. The result is the percentage distribution of the harmonic oscillations up to the 29th harmonic. The determined values are made available via the CubicleBUS and can be displayed via *powerconfig* from Version 2.2 and BDA PLUS, and with BDA Plus they can be saved for later diagnostics as an Excel-compatible "*.csv" file. In the case of the ETU76B/ETU776 trip unit, the measured and calculated values can also be shown on the display.

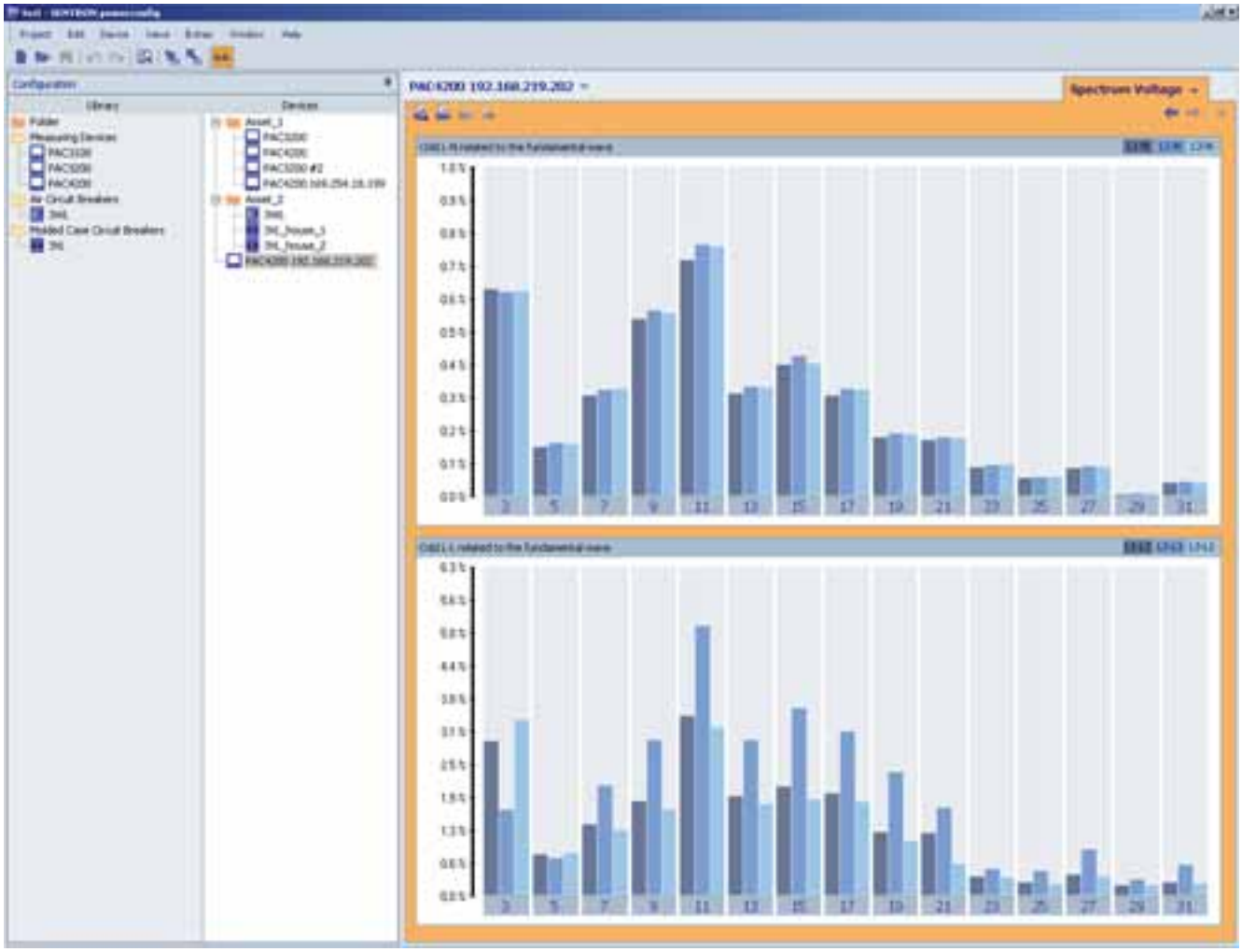

Figure 3-9 Harmonic analysis

Harmonics can be generated by the following:

- Domestic electronics, lighting and computers
- Single-phase power supply units
- Uninterruptible power supplies via inverters
- Saturated iron cores with inductances (transformers and reactors)
- Converters
- Rectifiers and inverters (especially in the case of speed-controlled asynchronous machines)
- Induction and arc furnaces, welding equipment
- Spark erosion machines

The harmonic currents thus caused instigate voltage drops at the system reactances. These result in significant overvoltages or power surges if there is a resonance condition due to additional series resonant circuits or anti-resonant circuits.

Harmonic currents can cause the following problems in plants:

- Overload of the neutral conductor
- Overheating of transformers and reactors
- Overheating of cables and switching elements
- Overloading of compensation capacitors
- Voltage distortions
- Overheating and power-up difficulties for rotating-field motors
- Zero point faults
- Signal corruption on bus lines

Electronic component faults: Costs arising from:

- Insufficient system quality increases the risk of failure of plant sections and can result in production standstills.
- If the provided power is exceeded, energy costs increase
- Faults in the open-loop and closed-loop control systems result in production faults and failures
- Occurrence of luminance changes, flickering, lighting failure
- Defective compensation systems and thus plant standstill
- Spurious tripping of protection equipment can result in standstill of plant sections
- Overload of the transformer and the cable results in increased fire hazard
- Reduction in the service life of electronic components

If increased harmonics are measured, it is advisable to carry out a 3-phase system analysis. This measurement, including the neutral conductor, must be carried out with the appropriate harmonics measuring devices over an extended period up to the 100th harmonic. The right choice of measuring connection point and professional analysis of the measured data are essential components in developing a concept that removes or at least reduces the harmonics and associated faults.

Standards

You can find further information in the EN 6100-2-4 standard where upper limits are defined for harmonics. The application area of this standard refers to harmonics up to the 50th harmonic order, intermediate harmonics up to the 50th harmonic order, and voltage components at higher frequencies above the 50th harmonic order.

Waveform buffer

The metering function PLUS has two independent waveform buffers (A and B) with which the current measured values are captured and buffered for one second. The buffer is continuously overwritten with the new measured values. If an event (trigger event) now occurs, the 1 s measured values are saved for later analysis of the events.

Typically, the function is used for analyzing a short-circuit (trigger event). But other events can also be analyzed.

Each of these waveform buffers has 8 channels, one each for the currents I_{L1}, I_{L2}, I_{L3}, IN and I_g as well as for the voltages U_{L1N}, U_{L2N} and U_{L3N}. Each channel is sampled with a frequency of 1.649 kHz, and the values are buffered for 1 s.

The waveform can be represented and exported with the BDA PLUS, for example.

Trigger event

Tripping operations, alarm signals and threshold warnings are available as trigger events so that the voltage wave for an undervoltage trip can be recorded. The trigger event can be set individually for each waveform buffer. In addition, the position in the stopped waveform buffer at which the trigger should be located can be stored.

The relationship between pre-history and post-history can be set in this way. If the pre-history of the trigger event is to be analyzed, the position can be set to 80%, for example. If the event occurs, 0.8 of a second of pre-history and 0.2 of a second of post-history are available in the waveform buffer, and an available COM16 adds a time stamp to the trigger event.

Data export

The extensive analysis data (approximately 25 KB per waveform) can be downloaded and analyzed with the BDA PLUS and the display of the ETU76B/ETU776. There are different zoom options and export functions available depending on the program.

When downloading, you must first select which channels are necessary, since approximately 1 minute per channel is required for downloading. The time duration is explained partly because, as well as recording the measured values, calculating the harmonics, and the extended protection function, the metering function also has to carry out tasks with higher priority and thus the communication process takes longer. Also, a large volume of data is transferred. The progress of this process is indicated by a progress bar.

3.3.2 Voltage transformer

For safety reasons, a voltage transformer is used to operate the metering function PLUS. This prevents voltage signals of up to 1 kV reaching the back of the ETU direct via the auxiliary conductor connections.

The voltage transformer converts the high primary voltage to a secondary voltage between 100 V and 120 V, depending on the version.

Connection

On the primary side, the voltage converter can be star or delta-connected. On the secondary side, it is always star-connected to the auxiliary conductor plug-in system (X8:5 to X8:8). The figure below shows the connection of the voltage transformer for operating with a metering function. On the primary side, the transformer can be star or delta-connected. Refer to the Operating Instructions for details.

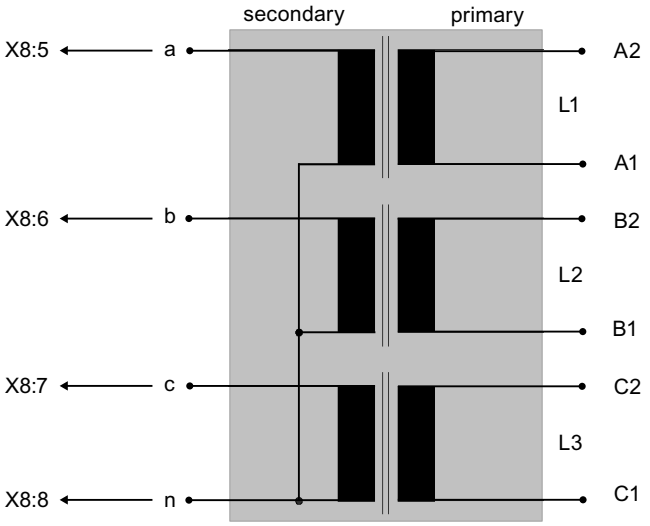

Figure 3-10 Connection of the voltage transformer for metering function

Maximum distance from voltage transformer

The maximum distance depends on the cross-section and the required accuracy class. Assuming a cross-section of 1.5 mm^2, the maximum distance from the voltage transformer is 50 m for Class 0.5, and 100 m for Class 3. If electromagnetic interference is expected, shielded cables must be used.

Parameters for setting the measured value

To determine the measured values, the data of the voltage transformer must be taken into account and set in the metering function. This includes:

- Primary voltage of the voltage transformer (factory setting: 400 V)
- Secondary voltage of the voltage transformer (factory setting: 100 V)
- Type of connection on the primary side (factory setting: star)

If the parameters have to be changed, the following setting options are available:

- *powerconfig* from Version 2.2
- With the BDA PLUS
- With the display of the ETU776/ETU76B
- Register address range 0x8001 (32769) to 0x8034 (32820)

Accuracy

The load of the metering function PLUS is 27 kΩ so that up to six metering functions can be connected simultaneously to a voltage transformer with apparent power of 2.5 VA (note accuracy class and cable length!).

The accuracy of the voltage transformer depends on the number of connected metering functions per voltage transformer:

- Class 0.5 for 1 to 3 metering functions
- Class 3 for 4 to 6 metering functions

These specifications apply for ambient temperatures of 30 to 50 °C and a primary-side voltage of 80 to 120% for a period of one year.

If the accuracy specified in the tables below has to be achieved, a Class 0.5 voltage transformer must be used. As well as the measured values specified in the table, the metering function also provides a minimum and maximum measured value.

Note

If the metering function is retrofitted at the customer end, the specified accuracy values cannot be guaranteed due to lack of calibration with the trip unit.

Table 3- 8 Metering function PLUS - Measured values for communication

Measured value	Range of values	Accuracy (when ordering the switch + trip unit + metering function PLUS direct) [1]
Currents I_{L1} / I_{L2} / I_{L3}, I_n	30 … 8000 A	± 1 %
Ground-fault current I_g (measurement with external G transformer)	100 … 1200 A	± 5 %
Phase-to-phase voltages U_{L12}, U_{L23}, U_{L31}	80 … 120% U_n	± 1 %
Star point voltages U_{L1N}, U_{L2N}, U_{L3N}	80 … 120% U_n	± 1 %
Instantaneous mean value of the phase-to-phase voltages U_{Llavg}	80 … 120% U_n	± 1 %
Instantaneous means value of the star point voltages U_{Lnavg}	80 … 120% U_n	± 1 %
Apparent power S_{L1}, S_{L2}, S_{L3}	13 … 8000 kVA	± 2 %
Total apparent power S_{total}	13 … 24000 kVA	± 2 %
Active power P_{L1}, P_{L2}, P_{L3}	– 8000 … 8000 kW	± 2% (cos φ > 0.6)
Total active power P_{total}	– 24000 … 24000 kVA	± 2% (cos φ > 0.6)
Reactive power Q_{L1}, Q_{L2}, Q_{L3}	– 6400 … 6400 kvar	± 4% (cos φ > 0.6)
Total reactive power Q_{total}	– 20000 … 20000 kvar	± 4% (cos φ > 0.6)
Power factors cos φ_{L1}, cos φ_{L2}, cos φ_{L3}	– 0,6 … 1 … 0.6	± 0.04
Power factors cos φ_{avg}	– 0,6 … 1 … 0.6	± 0.04
Long-time mean value of currents I_{L1}, I_{L2}, I_{L3}	30 … 8000 A	± 1 %
Long-time mean value of 3-phase current	30 … 8000 A	± 1 %
Long-time mean value of active power P_{L1}, P_{L2}, P_{L3}	13 … 8000 kW	± 2% (cos φ > 0.6)
Long-time mean value of 3-phase active power	13 … 8000 kW	± 2% (cos φ > 0.6)
Long-time mean value of apparent power S_{L1}, S_{L2}, S_{L3}	13 … 8000 kW	± 2 %
Long-time mean value of 3-phase apparent power	13 … 8000 kW	± 2 %
Long-time mean value of 3-phase reactive power	– 24000 … 24000 kvar	± 4% (cos φ > 0.6)
Active energy in normal direction	1 … 10000 MWh	± 2 %
Active energy in reverse direction	1 … 10000 MWh	± 2 %
Reactive energy in normal direction	1 … 10000 Mvarh	± 4 %
Reactive energy in reverse direction	1 … 10000 Mvarh	± 4 %
Frequency	15 … 440 Hz	± 0.1 Hz
THD for current and voltage	2 … 100 %	± 3% from the measuring range to the 29th harmonic
Current and voltage phase unbalance	2 … 150 %	± 1 %

[1] Accuracy is specified as follows: ± (x%) of the full-scale value + 2 LSD (least significant digit) for one year after calibration; use of a Class 0.5 voltage transformer as well as connection of no more than 3 SENTRON WLs to this voltage transformer.

Table 3- 9 Reference conditions:

Input current		I_{nmax} ± 1%
Input voltage		U_n ± 1%
Frequency		f = 50 Hz
Power factor		cos φ = 1
Waveform		Sine, THD ≤ 5%; symmetrical load
Ambient temperature		35 °C ± 5 °C
Auxiliary voltage		24 V DC in accordance with DIN 19240/EN 61131
Warm-up time		2 hours
Relative humidity		Up to 90%
Interfering fields		None
Measuring range:	Current	0.2 … 1.2 I_{nmax}
	Voltage	0.8 … 1.2 U_{nmax}

Extended protection function

Additional tripping criteria can be set via the protection function of the metering function PLUS. A parameterized delay time can achieve "debouncing" of briefly occurring events. With this, the switch only trips if the set event persists longer than the delay time.

The extended protection function of the metering function PLUS can monitor the following criteria and trigger the trip unit when limits are exceeded:

Table 3- 10 Protection function of the metering function PLUS

Parameters	Setting range	Possible delay
Phase unbalance current	5 … 50 %	0 … 15 s
THD current	5 … 50 %	5 … 15 s
Phase unbalance voltage	5 … 50 %	0 … 15 s
Undervoltage	100 … 1100 V	0 … 15 s
Overvoltage	200 … 1200 V	0 … 15 s
THD voltage	3 … 50 %	5 … 15 s
Direction of rotation of phase	–	–
Active power in normal direction	1 … 12000 kW	0 … 15 s
Active power in reverse direction	1 … 12000 kW	0 … 15 s
Underfrequency	40 … 70 Hz	0 … 15 s
Overfrequency	40 … 70 Hz	0 … 15 s

3.3.3 Delay of the threshold warning

You can parameterize whether a warning is generated when a threshold value is violated. This can be delayed like the extended protection function. These warnings are communicated on the CubicleBUS (e.g. for the configurable output module or as a trigger for the waveform buffer) and transferred via the COM16.

Table 3- 11 Threshold values of the metering function

Parameters	Setting range	Possible delay
Overcurrent	30 … 10000 A	0 … 255 s
Overcurrent ground fault	30 … 12000 A	0 … 255 s
Overcurrent N-conductor	30 … 10000 A	0 … 255 s
Phase unbalance current	5 … 50 %	0 … 255 s
Long-tirm mean value of current	30 … 10000 A	0 … 255 s
THD current	5 … 50 %	5 … 255 s
Undervoltage	100 … 1100 V	0 … 255 s
Overvoltage	100 … 1100 V	0 … 255 s
Phase unbalance voltage	3 … 50 %	0 … 255 s
THD voltage	3 … 50 %	5 … 255 s
Peak factor and form factor	1 … 2.55	0 … 255 s
Active power in normal direction	1 … 12000 kW	0 … 255 s
Active power in reverse direction	1 … 12000 kW	0 … 255 s
Power factor, capacitive	- 0,999 … – 1.000	0 … 255 s
Power factor, inductive	- 0,999 … – 1.000	0 … 255 s
Long-time mean value of active power	1 … 12000 kW	0 … 255 s
Apparent power	1 … 12000 kVA	0 … 255 s
Reactive power in normal direction	1 … 12000 kvar	0 … 255 s
Reactive power in reverse direction	1 … 12000 kvar	0 … 255 s
Long-time mean value of apparent power	1 … 12000 kVA	0 … 255 s
Long-time mean value of reactive power	1 … 12000 kvar	0 … 255 s
Underfrequency	40 … 70 Hz	0 … 255 s
Overfrequency	40 … 70 Hz	0 … 255 s

3.4 Functions and parameters

3.4.1 Important functions and parameters for communication

Thanks to their modular design and many diverse modules, the SENTRON WL circuit breakers provide an extremely large range of functions far beyond that of strict protection functions. This includes, for example, load management, threshold values, or additional tripping conditions of the extended protection function. These functions can also be utilized without communication.

3.4.2 Load management

Load management is used to avoid peaks in the load curve or to reduce their effects. Brief peaks can result in a circuit breaker overload and thus a tripping operation, or they can result in the energy supplier raising the price. Energy prices are generally calculated based on the maximum consumption values. Brief peaks can result in assignment to another tariff group and thus a higher energy price.

From trip unit ETU45B / ETU745, the SENTRON WL provides two current thresholds for local load management. Load shedding is the upper threshold, and load pick up is the lower threshold. Both values can be used locally, or in higher-level systems such as a PLC, to briefly shut down parts of the loads (e.g. air conditioners) so that the peaks in the load curve are reduced.

The figure below explains the functional principle of the load management functions "load shedding" and "load pick up". This is based on a circuit breaker with an overload parameter of 1000 A.

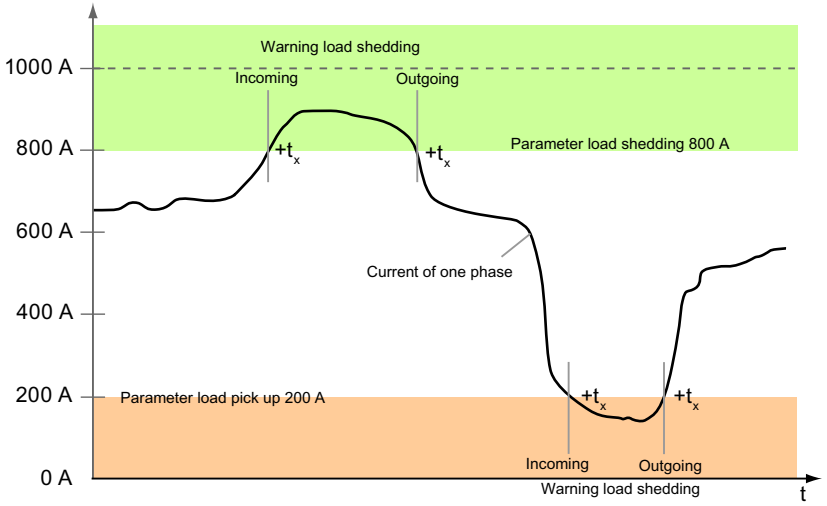

Figure 3-11 Load management functions: Load shedding and load pick up

Important: Violation of the upper or lower thresholds never results in a circuit breaker trip and instead only generates a message!

Threshold "load shedding"

If the current exceeds the set load shedding parameter in one phase, a "load shedding alarm" is generated. Only when this lower threshold is violated by all three phases is the "load shedding alarm" reset. These alarm messages are displayed direct as alarms in the BDA PLUS and they result in a yellow background in the status screen in the main overview. However, they are also channeled into the event log and are provided with a time stamp there.

Note

The event log is only available with COM16.

Threshold "load pick up"

The opposite applies for the load pick up threshold. If all three phases fall below the set parameters, a "load pick up alarm" is generated. If only one of the three currents exceeds the value of the parameter, the "load pick up alarm" is reset.

Delay time t_x

To prevent these messages being generated by brief current peaks and troughs, they can be delayed by the delay time t_x from 1 s to 15 s.

Where can the parameters be set?

The parameters for load management can be found in the parameter tree of BDA PLUS and *powerconfig* under "Device parameters – Switch – Protection function – Supplement".

Local switching signals

The signals load shedding/load pick up are available as outputs on the digital output module with rotary coding switch for automatically shutting down and connecting loads. The configurable output module can also be set in such a way as to output the load shedding and load pick up status.

3.4.3 Extended protection function

The extended protection function metering function PLUS adds further tripping criteria to those of the trip unit. If an additional tripping condition from the extended protection function is activated (e.g. phase unbalance voltage > 8%), this always results in a tripping operation that the metering function initiates via the trip unit.

The options specified in the table "Protection function of the metering function PLUS" in Chapter Voltage transformer (Page 48) are available as additional monitoring criteria.

3.4.4 Threshold values

As well as the load management facility (load shedding/load pick up), the metering function PLUS provides another option for automatic monitoring of operating data and for generating an alarm when a normal status is exited.

In general, the same monitoring functions are available for the threshold values as for the extended protection function. The greatest difference, however, is that the violation of a threshold never results in a tripping operation.

Together with the extended protection function, two thresholds can thus be defined (e.g. for overvoltage). With the lower of the two, only an alarm is generated via the threshold function (e.g. > 410 V), and if the voltage continues to rise, a tripping operation is triggered (e.g. > 430 V).

3.4.5 Lower limit of power transmission

Despite extremely high accuracy in recording the current over a large dynamic range, a fault current is generated with a switch with high rated current (e.g. 4000 A) at 1% accuracy in the lower range. One possible result of this is that when the switch is off (main contacts opened), a current flow of up to 40 A can be displayed and transferred via the communication system. To avoid this, it is possible to convert all recorded current values less than or equal to this parameter to zero using the parameter "Lower limit of power transmission". The factory setting for this value is 50 A. This means all values less than or equal to 50 A will appear on the display as 0 and will be used as 0 for internal calculations (power), and transferred as 0 via the communication system.

If this parameter is changed to 0, this function is switched off and all recorded measured current values are used direct.

The parameter for this can be found in the parameter tree of BDA PLUS or *powerconfig* under "Device parameters – Switch – Measured value settings".

3.4.6 Direction of incoming supply

The direction of "flow" of the energy at a given time, or how much energy has "flowed" in both directions until now, is important above all for coupling switches. It is necessary here to define a "normal direction". This can be either "top down" or "bottom up".

Depending on this, the measured active power values have a positive sign (in normal direction) or a negative sign (in reverse direction). The measured currents, by contrast, always have a positive sign!

The transferred energy values flow into two counters, active energy in the normal direction and active energy in the reverse direction. Neither energy counter has a sign.

3.4.7 Events and tripping operations

All events (with the exception of tripping operations) are provided with a time stamp and an incoming (+) or outgoing (–) indicator, and entered in the event log.

In the event log, the last ten events registered on the CubicleBUS are stored in the COM16. The trip log contains the last five tripping operations. Both can be evaluated via the BDA PLUS or *powerconfig* .

Events

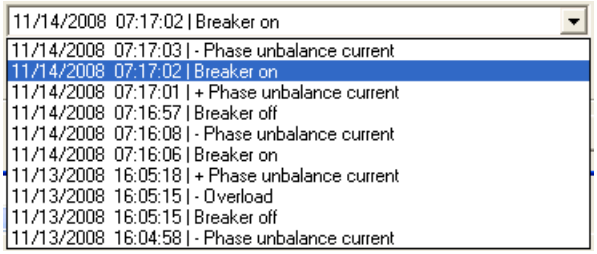

Tripping operations

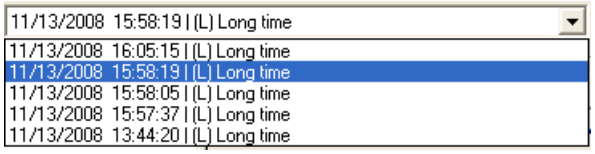

The event log has a depth of ten events and works like a FIFO memory, that is, when a new event arrives, the last event is removed from the event log.

The trip log functions in a similar way to the event log, but only the last five tripping operations are entered with a time stamp. An incoming or outgoing message is unnecessary in this case.

Note

The event log and the trip log are only available with the COM16 module.

3.5 External CubicleBUS modules

3.5.1 General information

General (description and equipment)

External CubicleBUS modules enable communication of the SENTRON WL circuit breaker with secondary devices in the circuit breaker field. It can be used, for example, to control analog indicators, to transfer alarms and the reason for tripping the circuit breaker, and to read in additional control signals. With the help of one of these modules, a Zone Selective Interlocking can also be implemented for short circuits.

Five different CubicleBUS modules can output data from the CubicleBUS system.

All external CubicleBUS modules have the same housing. The CubicleBUS can be connected to X1 and X2 with an RJ45 connector, or it can be connected to X3. This depends on whether or not a COM16 is available.

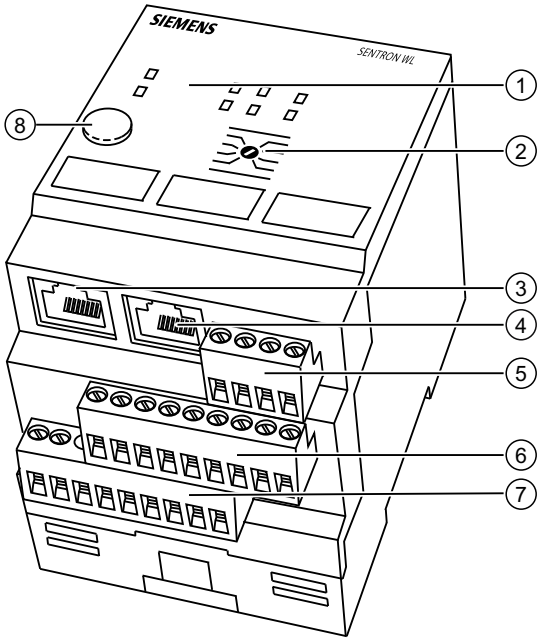

① LED
② Rotary coding switch
③ X1: CubicleBUS
④ X2: CubicleBUS
⑤ X3: CubicleBUS
⑥ X5: Inputs/outputs
⑦ X4: Inputs/outputs
⑧ Push to trip button

Figure 3-12 External CubicleBUS module

3.5.1.1 Rotary coding switch

With the exception of the configurable output module, all external CubicleBUS modules are configured using rotary coding switches.

The function indicated by the pointer of the rotary coding switch is active in each case. On some modules (e.g. digital output module) you must first consider the group selection (e.g. "1st Module" in the left position; color-coded) and then any additional meaning (e.g. time delay). The sections for the individual modules contain more detailed information.

In the figure below, the rotary coding switch has been set as follows:

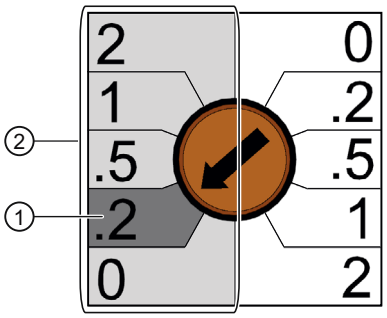

① 0.2 = delay of 0.2 s

② Switch position left = Module 1

Figure 3-13 Rotary coding switch setting on the CubicleBUS module - Delay time [s]

3.5.1.2 Installing the CubicleBUS modules

The external CubicleBUS modules are snapped onto a standard 35 mm DIN rail in the switching panel. You must note that the length of the connecting cable of the first module to the circuit breaker must not exceed 2 m.

For connecting the CubicleBUS modules to each other and to the circuit breaker, only the pre-assembled cables supplied or separately ordered should to be used. These cables enable both the communication of the CubicleBUS modules and their 24 V DC supply.

3.5.1.3 Connection of the power supply

The CubicleBUS must be supplied once with 24 V DC along its length. The connections X8:3 and X8:4 or the 4-pin connectors of the external CubicleBUS modules (X3) can be used for this purpose. The 24 V are transferred over the CubicleBUS cables. The required power of the 24 V DC supply depends on the configuration of the CubicleBUS. The technical data of the external CubicleBUS modules is listed in this chapter. The control system of the CubicleBUS must be connected to a secure power supply because in the event of a short circuit the system voltage reverts to an unspecified value.

Note

Hot plugging (hot swapping) of CubicleBUS cables/modules is not permitted.

The CubicleBUS is supplied with 24 V DC on X3. The table below shows the pin assignment of X3 on the CubicleBUS module:

Table 3- 12 Pin assignment of the X3 on the CubicleBUS module

X3:1	Ground 24 V DC
X3:2	CubicleBUS communication cable -
X3:3	CubicleBUS communication cable +
X3:4	+24 V DC

3.5.1.4 Maximum configuration of the CubicleBUS

The CubicleBUS can comprise up to 13 nodes.

These include:

- Trip unit ETU
- Metering function PLUS
- Breaker Status Sensor (BSS)
- COM16
- BDA PLUS
- ZSI module
- Digital output module with switch position left (1st module)
- Digital output module with switch position right (2nd module)
- Digital configurable output module
- Digital input module with switch position left
- Digital input module with switch position right
- Analog output module with switch position left (1st module)
- Analog output module with switch position right (2nd module)

In practice, only one selection of these modules is usually necessary

3.5.1.5 Installation guidelines for the CubicleBUS

The following guidelines apply for installing the CubicleBUS:

- Total length of the CubicleBUS cables max. 10 m.
- Only the pre-assembled cables must be used for connecting the CubicleBUS modules.
- At the last module, the cable must be terminated with a terminating resistor of 120 Ω, which is included with every module.
- The cables must always be connected from module to module. Spur lines are not permissible!
- The power supply must be ensured with a 24 V DC power supply with the usual tolerance and the properties listed in Chapter External current consumption with CubicleBUS (Page 80).
- If a ZSI module is used, it must be connected as the first external module.

3.5.1.6 Connection of external CubicleBUS modules

Note

Selecting the power supply

A sufficient external power supply of 24 V DC must be ensured. You can find additional information on this in Chapter External current consumption with CubicleBUS (Page 80).

Connection of the CubicleBUS without COM16

The figure below shows the connection of external CubicleBUS modules to the SENTRON WL without COM16.

- Make the first connection with four wires.
- Connect the CubicleBUS with RJ45 connectors using the supplied CubicleBUS cables.
- Connect the power supply to the X3 interface.

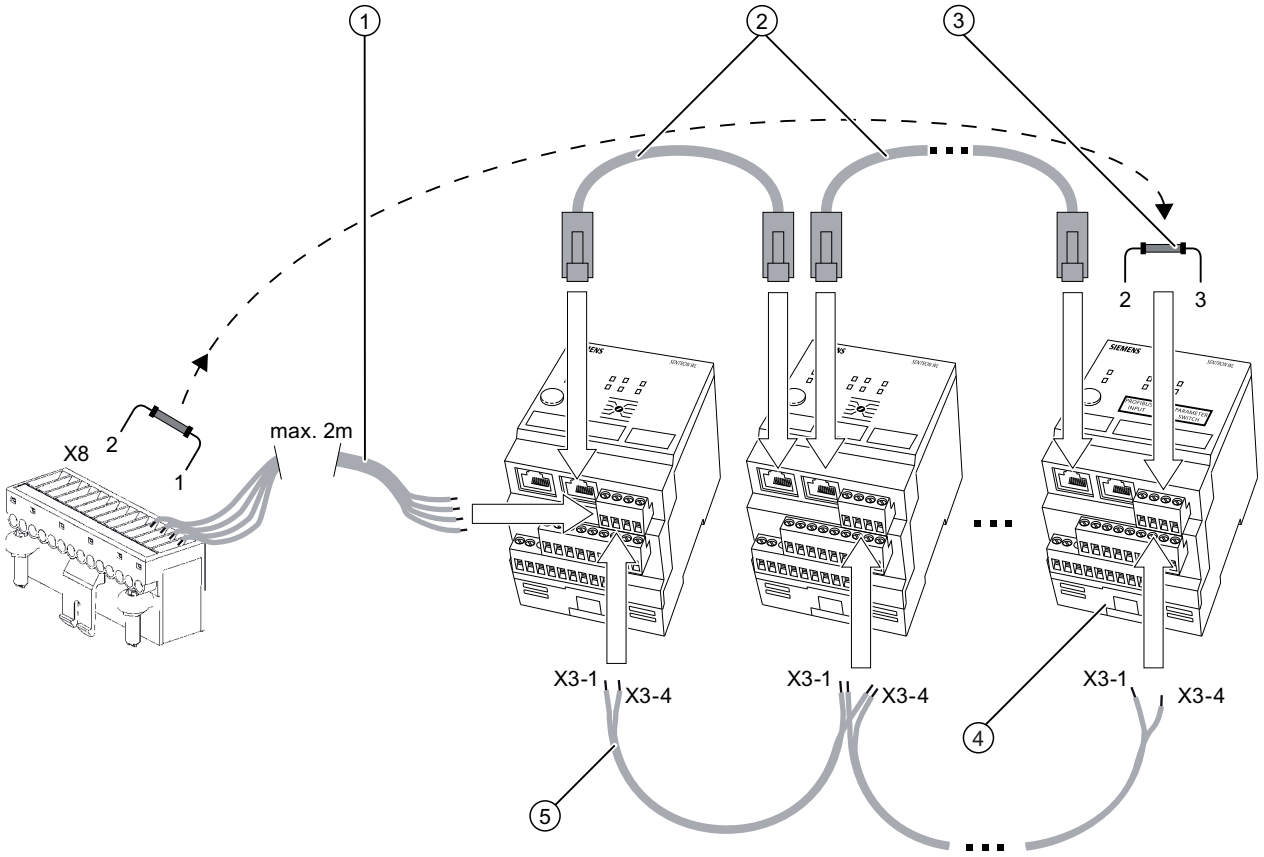

① Connecting cable to the first module
② Connecting cables between the modules
③ Terminating resistor 120 Ω 0.5 W on the last module
④ CubicleBUS modules
⑤ Cable connection for power supply with 24 V DC

Figure 3-14 Connection of the CubicleBUS without COM16

Connection of the CubicleBUS with COM16

The figure below shows the connection of external CubicleBUS modules to the SENTRON WL with COM16:

- Connect the external CubicleBUS modules using the supplied 0.5 m CubicleBUS cables and integrate them into the system.
- Provide the CubicleBUS with a terminating resistor.
- Connect the power supply to the X3 interface.

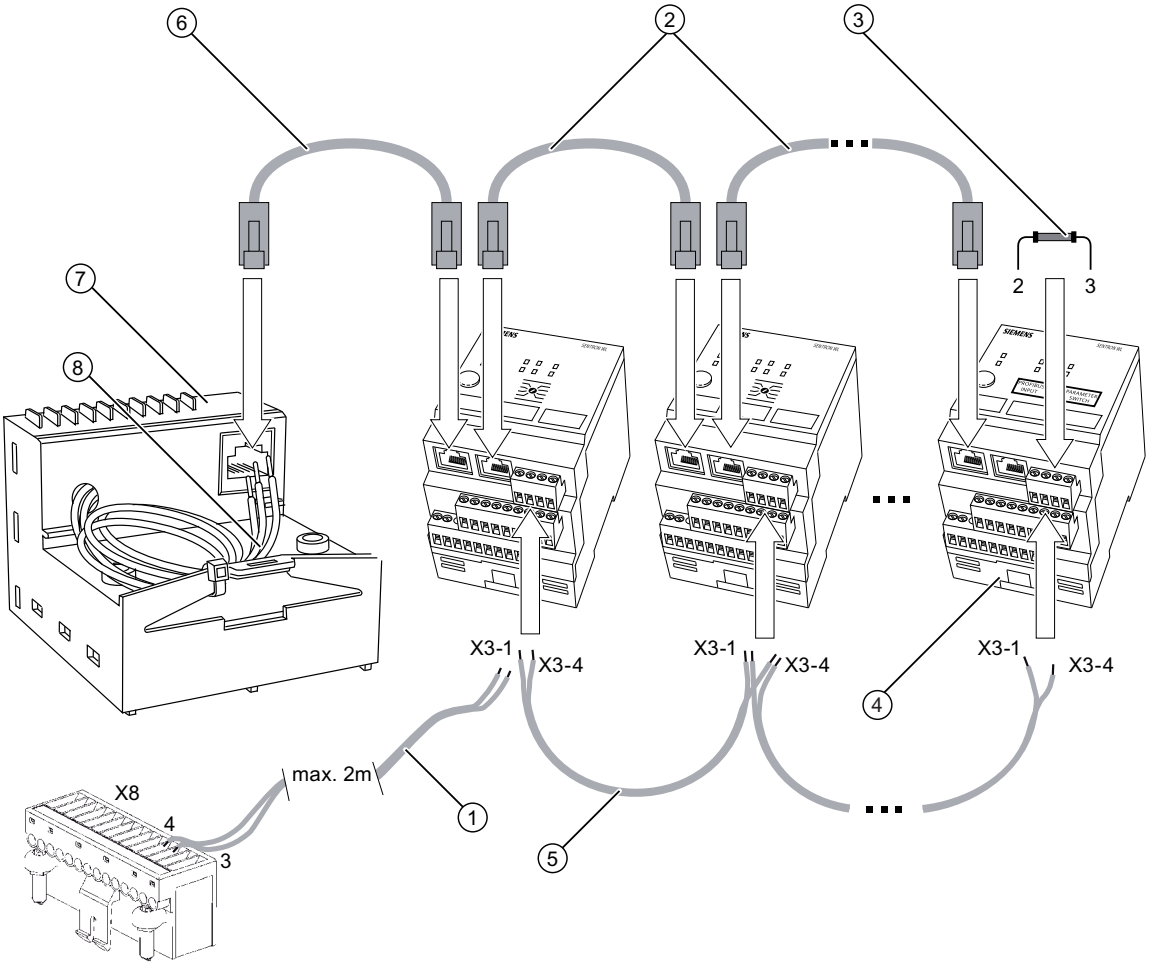

① Only with more than 2 CubicleBUS modules: Connecting cable between X8 and the first CubicleBUS module for power supply with 24 V DC
② Connecting cables between the CubicleBUS modules
③ Terminating resistor 120 Ω 0.5 W on the last module
④ Last CubicleBUS module
⑤ Connecting cables between the CubicleBUS modules for power supply with 24 V DC
⑥ Connecting cable between COM16 and 1st CubicleBUS module (with two RJ45 connectors)
⑦ COM16
⑧ Wire four cables to X8

Figure 3-15 Connection of CubicleBus with COM16

3.5.1.7 LED indicator

The LEDs on the external CubicleBUS modules enable simple diagnostics and testing of the module. As explained in the tables below, the internal status and the communication connection can be diagnosed and thus the correct cabling can be checked.

The tables below provide an overview of the LED indicators:

"DEVICE" LED

The "DEVICE" LED indicates the status of the external CubicleBUS module:

Table 3- 13 "DEVICE" LED

"DEVICE" LED	Meaning
Red	Internal fault in the CubicleBUS module
Yellow	CubicleBUS module in test/force mode
Green	Module in operation

CubicleBUS LED

The CubicleBUS LED on the external CubicleBUS modules indicates whether there is a communication relationship with other modules:

Table 3- 14 "CubicleBUS" LED

"CubicleBUS" LED	Meaning
Green	There is a connection to another CubicleBUS module.
Off	No other CubicleBUS module detected.

Other LEDs

All other LEDs indicate whether the outputs are set or the inputs are supplied with 24 V DC and have thus been activated.

Table 3- 15 LEDs

All other LEDs	Meaning
Yellow	• On the input module this means a high signal at the relevant input. • On digital output modules, the output is active and the contact is closed. • On the analog output module, a yellow LED indicates either that the full-scale deflection value has been exceed by 20% (in the case of U, I, P), or cos phi is greater than 0.8, or the frequency is greater than 45 Hz.
Off	If none of the above listed statuses apply, the LED is off.

3.5.1.8 Test of the digital input and output modules

To prevent malfunctions of the circuit breaker or one of its components, the test must only be carried out before commissioning. The correct functioning of the CubicleBUS modules can be checked in test mode. A distinction must be made between the individual modules.

Carry out test mode

- Test mode is started by pressing the "Test" button on the CubicleBUS module once.
- All inputs or outputs and the associated LEDs are then switched off.
- The color of the DEVICE LED changes from green to yellow.
- Repeated pressing of the "Test" button when the LED is switched on causes the relevant input or output to be switched on and off alternately.
- On the input module, the signals are also transferred via the CubicleBUS as well as the LEDs of the inputs, and then to any connected MODBUS.
- In the case of the digital outputs, the LEDs and associated outputs in each case are switched through. This enables checking of the connected devices.

"Forcing"

The inputs of the input module, the outputs of the output module, the ZSI input and the ZSI output can be "forced" via the communication system of the BDA PLUS. This means test mode can be switched on via the communication system and the inputs or outputs can be overwritten for test purposes.

If the "Test" key is not pressed for longer than 30 s, or no change is triggered via the communication system, test mode is automatically canceled.

Testing process

The table below shows the testing process for checking the digital inputs and outputs on the CubicleBUS.

Table 3- 16 Testing process for the digital inputs/outputs on the CubicleBUS

Normal operation	DEVICE 1 2 3 CubicleBUS 4 5 6	Normal operating status of the input module or output module. The inputs or outputs are on or off according to the wiring or the pending signals.
Press "Test" button	DEVICE 1 2 3 CubicleBUS 4 5 6	The module then switches to test mode, indicated by the yellow DEVICE LED.
Press "Test" button	DEVICE 1 2 3 CubicleBUS 4 5 6	Input or output 1 is selected by pressing once. This is indicated by the green LED 1. Following this, the output can be switched on or off alternately, or the on or off signal of the input can be transferred by quickly pressing the "Test" button (1 s).
After a pause of longer than 2 s, press the "Test" button.	DEVICE 1 2 3 CubicleBUS 4 5 6	Input or output 2 selected. As under 1, the output can be switched by quickly pressing the button. On relay modules, a click can be heard.
After a pause of longer than 2 s, press the "Test" button.	DEVICE 1 2 3 CubicleBUS 4 5 6	Input or output 3 selected. On input modules, the presence of 24 V DC is simulated at the relevant input and transferred via c.
After a pause of longer than 2 s, press the "Test" button.	DEVICE 1 2 3 CubicleBUS 4 5 6	Input or output 4 selected. Fast pressing of the "Test" button tests the selected input or output.
After a pause of longer than 2 s, press the "Test" button.	DEVICE 1 2 3 CubicleBUS 4 5 6	Input or output 5 selected. Fast pressing of the "Test" button tests the selected input or output.
After a pause of longer than 2 s, press the "Test" button.	DEVICE 1 2 3 CubicleBUS 4 5 6	Input or output 6 selected. Fast pressing of the "Test" button tests the selected input or output.
After a pause of longer than 2 s, press the "Test" button.	DEVICE 1 2 3 CubicleBUS 4 5 6	LED overall test. If the "Test" button is not pressed again within 5 s, test mode is canceled.
Press the "Test" button within 5 s.	DEVICE 1 2 3 CubicleBUS 4 5 6	The test run can start from the beginning.

Shows a yellow light

Shows a green light

Not lit

3.5.2 Digital input module

Up to two digital input modules can be operated simultaneously on a CubicleBUS, once as a module with the position "PROFIBUS INPUT" and once as a "PARAMETER SWITCH". The polarity of the inputs is not important.

Note

The digital input module can also be operated in MODBUS with the switch position "PROFIBUS Input", in which case it makes the data available on the MODBUS.

Input module function

The digital input module offers connections for up to six additional binary signals (24 V DC). The signals are transferred direct via MODBUS and processed at the fieldbus level. Such signals include:

- The status of a Buchholz relay
- The open/closed signal of the control cabinet door
- Violation of a specified temperature
- The status of an MCCB without direct communication capability or of a switch disconnector can also be transferred on MODBUS.

These protective devices can also be switched in conjunction with the configurable output module, resulting in a low-cost alternative to other solutions with additional MODBUS input/output modules.

Switch position "PROFIBUS INPUT"

In switch position "PROFIBUS INPUT", a total of six inputs are available.

Switch position "PARAMETER SWITCH"

If the rotary coding switch is in position "PARAMETER SWITCH", there are also six inputs available, but in this configuration the first input has the effect of changing the active parameter set. If the connected ETU does not have two parameter sets (e.g. ETU45B / ETU745), this input can also be used without restriction.

Rotary coding switch

The position of the rotary coding switch selects the operating mode.

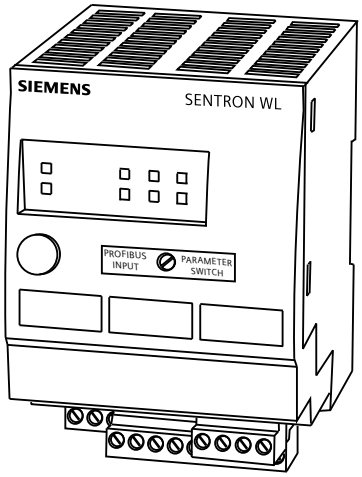

Figure 3-16 Digital input module

3.5.2.1 Parameter set changeover

There are two different parameter sets for the protection function in the ETU76B / ETU776 trip unit. This protection function is necessary when switching between mains operation and generator operation in the event of a power failure, and there is the possibility of all tripping conditions changing.

Changeover

Changeover between the two parameter sets can be made by means of:

- Modbus RTU communication
- BDA PLUS
- Display in the ETU76B / ETU776
- Digital input module

Since the CubicleBUS is an event-driven bus, the ETU76B / ETU776 trip unit switches to the other parameter set when a changeover request is made via the CubicleBUS.

This means, if a changeover is made to parameter set B via the BDA PLUS, for example, although the input on the digital input module is at "0" (parameter set A), the active parameter set in the trip unit changes to parameter set B. Only when the input on the digital input module is set to "1" and then back again to "0" is an event for changing to parameter set A initiated on the CubicleBUS.

For this purpose, the first input on the module is used in the position "PARAMETER SWITCH" of the rotary coding switch. If a "1" signal (LED on input 1 is yellow) is detected there, changeover to parameter set B is signaled to the trip unit. If the input signal changes back to "0", changeover to parameter set A is communicated and the LED at input 1 goes out.

3.5.2.2 Technical data

The table below contains the technical data of the digital input module on the CubicleBUS:

Table 3- 17 Technical data of the digital input module

Operating voltage on the CubicleBUS min./max. (V)	19.2 / 28.8
Current consumption from the CubicleBUS min./max. (mA)	29 / 43
Number of isolated channels per digital input module	6
Voltage value for reliable detection of a "1" signal (V)	> 16 V
Current consumption per input at a "1" signal (mA)	7.5
Voltage value for reliable detection of a "0" signal (V)	< 1 V
Current consumption per input at a "0" signal (mA)	0
Maximum number of modules possible on one CubicleBUS	2
Power loss min./max. (W)	0.72 / 0.94
Dimensions W/H/D (mm)	70 / 86 / 95
Weight (kg)	0.223
Temperature range (°C)	-20 / 60

3.5.3 Digital output module with rotary coding switch

Six binary information items about the switch status (alarms and tripping operations) can be output via the digital output module to external signaling devices (e.g. indicator lights, horns), or used for selective shutdown of other plant units (e.g. frequency converters).

The switch position on the left selects the events in the adjacent dark-gray field, and the switch position on the right selects the events in the adjacent light-gray field.

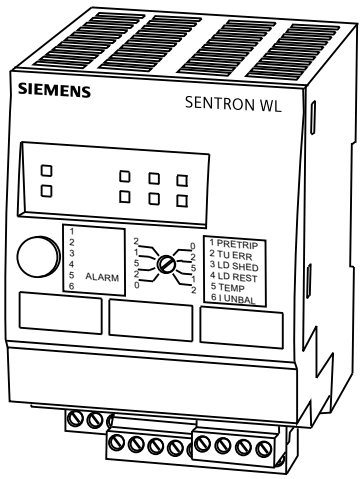

Figure 3-17 Digital output module

Versions

The current carrying capacity of an output is 150 mA here, and the maximum voltage is 24 V DC. Only direct voltage can be switched. The output module offers a changeover contact in each case with a maximum load of up to 12 A. Voltages to 230 V and AC voltage are possible. In addition, the relay contacts are isolated.

Load shedding message

By means of the load shedding and load pick up signals, a load can be switched off or connected automatically, dependent on the capacity utilization of the circuit breaker. This is the first stage of energy management.

Configuration

The configuration of the module is set using a rotary coding switch that selects one of the two output assignments as well as the associated delay time.

Switch position left

If the rotary coding switch is set to one of the positions in the left dark-gray field, the outputs 1 to 6 are assigned the subsequent event signals:

1. Tripping operation due to overload (L)
2. Short-time delayed short-circuit release (S)
3. Instantaneous short-circuit release (I)
4. Ground-fault tripping (G)
5. Ground-fault alarm signal
6. Tripping operation due to overload in the neutral conductor (N)

Switch position right

If the rotary coding switch is set to one of the positions in the right light-gray field, the outputs 1 to 6 are assigned the following functions:

1. Leading signal of overload trip (delay time 0 s)
2. Fault in trip unit (ETU)
3. Load shedding
4. Load pick up
5. Temperature alarm
6. Phase unbalance current

Delay time

As well as the assignment of the outputs, an additional delay time can be set using the rotary coding switch. 0/0.2 s/0.5 s/1 s and 2 s are available. This can be used, for example, to suppress briefly occurring events and to output these only after they are pending for longer (e.g. phase unbalance). The leading overload trip signal that can be used for advance shutdown and protection of connected frequency converters is independent of the set delay time and is always instantaneous.

Maximum assignment on the CubicleBUS

Up to two digital output modules with rotary coding switches can be operated simultaneously on a CubicleBUS. For this purpose, these must be configured once in the operating mode switch position left and once in the operating mode switch position right.

LED indicators

The LEDs indicate the current status of the six outputs. If an LED is off, the associated output is not set. If the output is activated, the LED shows a yellow light.

3.5.3.1 Technical data

The table below contains the technical data of the digital output module with rotary coding switch on the CubicleBUS:

Table 3- 18 Technical data of the digital output module with rotary coding switch

Operating voltage on the CubicleBUS min./max. (V)	19.2 / 28.8
Current consumption from the CubicleBUS min./max. (mA) relay	29 / 250
Number of isolated channels per digital output module	6
Max. possible aggregate current of all 6 outputs; relay output at 24 V DC/250 V AC/250 V DC (A)	10 / 10 / 2.5
Max. possible current on relay outputs per channel at 24 V DC (A)	2.7
Maximum number of modules possible on one CubicleBUS	2
Power loss min./max. (W)	0.74 / 5.4
Dimensions W/H/D (mm)	70 / 86 / 95
Weight (kg) relay	0.321
Temperature range (°C)	– 20 / 60

3.5.4 Configuration of the digital output module

3.5.4.1 Technical data

The table below shows the technical data of the digital configurable output module on the CubicleBUS:

Table 3- 19 Technical data of the digital configurable output module

Operating voltage on the CubicleBUS min./max. (V)	19.2 / 28.8
Current consumption from the CubicleBUS min./max. (mA)	29/39 (250 rel.)
Number of isolated channels per digital output module	6
Max. possible current per channel with 24 V DC relay	2.7
Max. aggregate current (6 channels) relay at 24 V DC/250 V AC/250 V DC (A)	10 / 10 / 2.5
Maximum number of modules on one Cubicle	1
Power loss min./typ./max. (W)	0.74 / 5.4
Dimensions W/H/D (mm)	70 / 86 / 95
Weight (kg)/relay	0.321
Temperature range (°C)	– 20 / 60

Digital configurable output module

The digital configurable output module has six outputs. The outputs are configured exclusively using the *powerconfig* software.

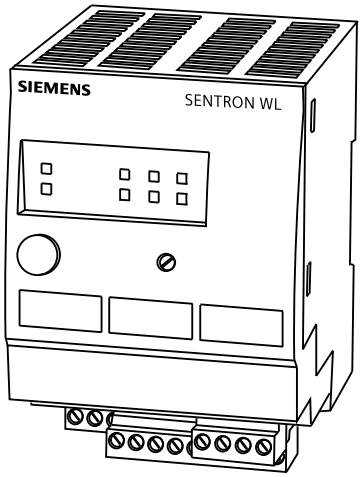

Figure 3-18 Digital configurable output module

Configuration

Configuration In contrast to the modules with rotary coding switch, the outputs are assigned per software instead of by means of a selector switch. BDA PLUS or *powerconfig* is available as configuration software.

With this tool, a separate "Config. output module" node is available in the navigation tree. The events listed in the adjacent table can be assigned to the outputs via these nodes using drop-down fields.

Assigning the outputs

The first three outputs of the module can be assigned up to six events that are connected to the output via an OR logic operation. This allows, for example, the implementation of a group signal if the switch is in overload excitation or if a warning for phase unbalance is present. The last three outputs can only be assigned one of the events direct.

Events

Status messages, alarms, tripped signals, threshold violation signals, triggers of the waveform buffer, bits that are directly addressable via MODBUS, and the active parameter set are available as events for configuration.

Control via MODBUS

The outputs of the module can be set direct via MODBUS (by a PLC, for example) via the MODBUS bits that are transferred via the high byte of register 17671 (0x4507) (see Chapter Register block RB 69 status of the modules (Page 187)). Together with the digital input module, it is possible to integrate switchgear that does not have direct communication capability into a communication system.

Status detection

The status can be read in via the input module. With this, for example, a motorized operating mechanism could be switched on or off via the digital configurable output module. However, many other diverse applications are conceivable.

Threshold delay

In contrast to the digital output module with rotary coding switch, it is not possible to add a time delay to the event. If, for example, a threshold value is to be output with a delay via the digital configurable output module, this can only be achieved by delaying the threshold value.

3.5.4.2 LED indicator

As on the digital output module with rotary coding switch, this module also indicates the status of the outputs via the labeled LEDs. The table below contains a list of all events on the CubicleBUS that can be output via the digital configurable output module.

These events are available to the digital configurable output module

Table 3- 20 Events on the CubicleBUS

Status	Switch on
	Switch off
	Spring energy store compressed
	Ready for closing
	General warning
	General tripping operation
	Write protection active
	Communications OK
Alarms	Overload
	Overload in neutral conductor
	Load shedding
	Load pick up
	Ground-fault alarm
	Overtemperature
	ETU fault
	Phase unbalance current
Tripping operations	Overload (L)
	Short-time delayed short circuit (S)
	Instantaneous short circuit (I)
	Ground fault (G)
	Overload in neutral conductor (N)
	Phase unbalance current
	Phase unbalance voltage
	Underfrequency
	Overfrequency
	Undervoltage
	Overvoltage
	Active power in normal direction
	Active power in reverse direction
	THD current
	THD voltage
	Reverse direction of rotation of phase

Communication bits	Communication bit 1
	Communication bit 2
	Communication bit 3
	Communication bit 4
	Communication bit 5
	Communication bit 6
Active parameter set	Parameter set A active
	Parameter set B active
Threshold values	Overcurrent
	Overcurrent in neutral conductor
	Overcurrent ground fault
	Phase unbalance current
	Phase unbalance voltage
	Long-tirm mean value of current
	Undervoltage
	Overvoltage
	THD current
	THD voltage
	Peak factor
	Form factor
	Underfrequency
	Overfrequency
	Active power in normal direction
	Active power in reverse direction
	Apparent power
	Reactive power in normal direction
	Reactive power in reverse direction
	Power factor, capacitive
	Power factor, inductive
	Long-time mean value of active power
	Long-time mean value of reactive power
	Long-time mean value of apparent power
Occurred trigger event	Waveform buffer A
	Waveform buffer B

3.5.5 Analog output module

Via the analog output module, the most important measured values made available via the CubicleBUS can be output to analog indicator instruments, e.g. rotary coil instruments, in the control cabinet door. Four channels are available in each analog output module for this purpose. The signals are available at two physical interfaces, a 4 - 20 mA interface and a 0 - 10 V interface.

Interfaces

The measured values can be picked up in the form of 0 - 10 V via the X4 connector on the CubicleBUS module, and the 4 - 20 mA interface is available on the X5 connector. Both output forms are always active simultaneously.

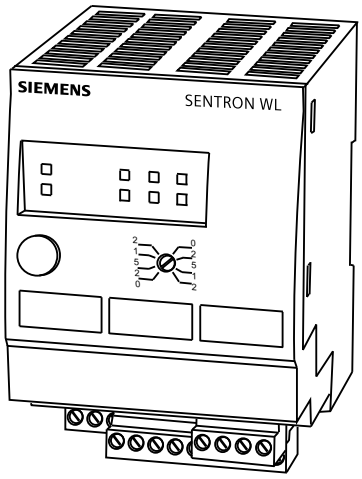

Figure 3-19 Analog output module

3.5.5.1 Selecting the measured values

The measured values output via the four analog channels are selected using a rotary coding switch. The output forms I, V, P, f and cos ϕ are available. The selection box of the rotary coding switch is divided vertically. If the switch is set to a value in the left half, the module is automatically addressed as Module 1, so any second module must then be set to a value in the right half. Only in this way is simultaneous operation with two analog output modules possible.

Maximum assignment

Up to 2 analog output modules can be operated on one CubicleBUS.

Indicators

All rotary coil instruments with an inner flow resistance of more than 20 kΩ (as voltage output) and between 50 Ω and 250 Ω (as current output) can be used as indicator. The LEDs for the cannels show a yellow light when the current value exceeds 20% of the full-scale deflection value (in the case of V, I, P), or cos ϕ is greater than 0.8, or the frequency is greater than 45 Hz.

Switch position "I"

If the rotary coding switch is at switch position "I", the measured current values are output linearly:

A01: Current in phase I_{L1}

A02: Current in phase I_{L2}

A03: Current in phase I_{L3}

A04: Current in neutral conductor

Calculation of full-scale value

Since the circuit breaker can be designed for different rated currents, there must be automatic scaling to the full-scale value, or interpretation of the maximum output value of the analog output module. The value of the currently used rating plug is used for this.

The maximum value is calculated by multiplying the value of the rating plug by 1.2 and then rounding up to the nearest 100.

Example: With a rating plug of 1600 A, the full-scale value of the rotary coil instrument must be 2000 A (1600 x 1.2 = 1920 ⇒ 2000 A). That is, 0 V/4 mA correspond to 0 A, 10 V/20 mA correspond to 2000 A.

Switch position "V"

If the rotary coding switch is at switch position "V", the following

voltages will be applied to the four analog outputs:

A01: External conductor voltage V_{L12}

A02: External conductor voltage V_{L23}

A03: External conductor voltage V_{L31}

A04: Phase-to-neutral voltage V_{L1N}

In most cases, the external conductor voltages are indicated on the control cabinet doors. For this reason, the first three channels are assigned these measured values. If the voltage is required between a phase and the neutral conductor, it is available via the output.

The full-scale deflection value for the rotary coil instrument is derived by multiplying the rated voltage of the system by 1.1 and then rounding up to the nearest 50 value.

Example: The rated voltage of the system is 400 V. The full-scale value is then 450 V (400 V x 1.1 = 440 V ⇒ 450 V).

Switch position "P"

If the rotary coding switch is at the "P" position, the measured values of the power are output via the four channels:

A01: Active power phase P_{L1}

A02: Active power phase P_{L2}

A03: Active power phase P_{L3}

A04: Total apparent power S_{total}

To calculate the full-scale deflection value of the active power per phase, the value of the rating plug must be multiplied by the rated voltage of the system. The full-scale deflection value is then subdivided into a value range shown in the table below.

For the total apparent power and the total active power (position f), the calculated value still has to be multiplied by 3 before the full-scale deflection value can be read from the table.

The table below gives the value ranges for power [W/VA]:

Table 3- 21 Value ranges for power [W/VA] on the analog output module

From	To	Full-scale deflection value
0	49,999	50,000
50,000	99,999	100,000
100,000	199,999	200,000
200,000	299,999	300,000
300,000	399,999	400,000
400,000	499,999	500,000
500,000	999,999	1,000,000
1,000,000	1,999,999	2,000,000
2,000,000	2,999,999	3,000,000
3,000,000	4,999,999	5,000,000
5,000,000	9,999,999	10,000,000
10,000,000	19,999,999	20,000,000
20,000,000	∞	30,000,000

Example:

I_R = 1600 A, rated voltage = 400 V; ⇒ Full-scale deflection value = 1,000,000 W

Switch position "f"

If the rotary coding switch is at the "f" position, the most important measured values are output, with the exception of the currents. In conjunction with another module in the position "I", all important measured values are thus displayed:

A01: Frequency of the system

A02: Mean value of the phase-to-phase voltage

A03: Total active power

A04: Mean value of the power factors

The scale for the display of the frequency must reach from 45 Hz to 65 Hz. This makes it possible to display the standard frequencies in the IEC and UL countries. Example: 45 Hz correspond to 0 V/4 mA and 65 Hz correspond to 10 V/20 mA. The scalings of the other measured values can be read in the appropriate switch positions.

Switch position "cos φ"

The measured values below are output in the switch position "cos φ":

A01: Power factor cos φ_{L1}
A02: Power factor cos φ_{L2}
A03: Power factor cos φ_{L3}
A04: Phase unbalance current in %

The display of the power factors ranges from 0.7 capacitive (corresponding to 0 V/4 mA) through 1 (corresponding to 5 V/12 mA) to 0.7 inductive (corresponding to 10 V/20 mA). The phase unbalance of the three currents is output from 0% (0 V/4 mA) to 50% (10 V/20 mA).

Note the correct polarity when connecting.

3.5.5.2 Test function

Test mode is activated by pressing the "TEST" button. Test mode is indicated by the yellow DEVICE LED. During test mode, the measured values continue to be updated but are not output on the relevant channel.

Test mode is carried out as follows:

- Pressing the "TEST" button switches to test mode.
- When the "TEST" button is next pressed, output 1 is selected. This is indicated by LED A01. The test output signal is output. With currents, voltages and power, this corresponds to the full-scale value, in the case of cos φ_1 and frequency 55 Hz.
- When the button is next pressed, output 2 is selected. This is indicated by LED A02. This automatically deletes the value at output 1 and sets the value at output 2.
- By repeating the previous step, all four outputs can be gradually tested with regard to their wiring and correct scaling.
- If output A04 is selected and the "TEST" button is pressed, all four LEDs are activated but no output is set. When the button is next pressed, output 1 is selected again.
- If the "TEST" button is not pressed for 30 seconds after selecting an output, test mode is automatically canceled and normal operating mode is activated. The currently pending values in the background are now available again at the outputs.

3.5.5.3 Technical data

The table below shows the technical data of the analog output module on the CubicleBUS:

Table 3- 22 Technical data of the analog configurable output module

Operating voltage on the CubicleBUS min./max. (V)	19.2 / 28.8
Current consumption from the CubicleBUS min./max. (mA)	63 1 50
Inner flow resistance of the rotary coil instrument voltage min./max.	20 kΩ/∞
Inner flow resistance of the rotary coil instrument current min./max.	20/250 Ω
Maximum number of modules on one Cubicle	2
Power loss min./typ./max. (W)	0.74 / 5.4
Dimensions W/H/D (mm)	70 / 86 / 95
Weight (kg)	0.223 / 0.321
Temperature range (°C)	– 20 / 60

3.6 Measuring accuracy

3.6.1 3WL breaker measuring accuracy

The measuring accuracy depends on the circuit breaker components.

The accuracy (when ordering the switch + trip unit + metering function PLUS direct) refers to the full-scale value.

The full-scale value refers to the maximum rated current $I_{n\ max}$ of the breaker, regardless of the size of the rating plug and the rated current I_n set by it.

Example:

If a rating plug 630 A is used with a 1000 A switch, the accuracy for the full-scale value is 1000 A.

ETU45B / ETU745, ETU748		
	Display	With communication
Without metering function PLUS	± 10 %	± 10 %
With metering function PLUS	± 10 %	± 1 %[1]

ETU76B / ETU776		
	Display	With communication
Without metering function PLUS	± 10 %	± 10 %
With metering function PLUS	± 1 %[1]	± 1 %[1]

[1] If a metering function PLUS is retrofitted, an accuracy of ± 3% is available, and this in turn is oriented around the full-scale value.

3.7 External current consumption with CubicleBUS

3.7.1 Power required by a SENTRON WL with CubicleBUS

The SENTRON WL circuit breakers with CubicleBUS must also communicate and indicate internally and externally, even when the main contacts are open. For this reason, it is necessary here to connect an external power supply. The required power differs here according to the degree of configuration and options used.

General information

The transformers for the SENTRON WL circuit breakers consist of two parts:

- Rogowski coils: supply the current values
- Energy transformers: supply the trip unit with energy

In the case of breakers without additional external supply, the trip units are already activated with 80 A 3-phase or higher for size 1 and 2, and with 150 A 3-phase or higher for size 3, and they monitor the power distribution.

Energy requirements

On the ETU45B / ETU745, ETU748 trip unit, the energy from the transformers is sufficient to activate not only the protection functions but also the four-line display. Auxiliary power is only required for the backlighting. If the CubicleBUS is connected with 24 V DC, the display of the ETU45B / ETU745, ETU748 draws its power from this voltage.

The pixel-graphics display of the ETU76B / ETU776 requires more power than the energy transformer can supply. For this reason, the display of the ETU76B / ETU776 only functions when an external CubicleBUS power supply is connected. This does not affect the protection functions!

NOTICE
Number of CubicleBUS components If more CubicleBUS components than just the trip unit are used in a SENTRON WL circuit breaker, this breaker must be supplied with an external 24 V DC auxiliary voltage.

CubicleBUS connection

The CubicleBUS comprises four cores, two for communication and two for the 24 V DC power supply.

Connect the CubicleBUS as follows to the external terminals X8:1 to X8:4:

- 24 V DC to X8:3
- Ground of 24 V DC to X8:4

3.7.2 Selecting the power supply

Note the following when selecting the power supply:

- First, you must use the available CubicleBUS modules to calculate the maximum continuous current drawn by the CubicleBUS modules from the CubicleBUS supply.
- The second variable to be calculated is the peak inrush current of all modules. The power supply must be able to carry the maximum peak inrush current for a period of 100 ms.

The table below contains the details of continuous current drawn and the maximum start-up current for selecting the suitable power supply for a SENTRON WL circuit breaker with CubicleBUS.

Table 3- 23 Calculating the power consumption of the CubicleBUS modules for SENTRON WL with CubicleBUS system

CubicleBUS module	Number of modules per CubicleBUS	Max. continuous current per module from the CubicleBUS	Max. start-up current per module from the CubicleBUS
ETU745 trip unit	1	120 mA	2000 mA
ETU776 trip unit	1	170 mA	2000 mA
Metering function PLUS	1	120 mA	120 mA
Breaker Status Sensor BSS	1	40 mA	110 mA
COM16 communication module	1	125 mA	180 mA
ZSI module	1	50 mA	125 mA
Digital output module with rotary coding switch, relay outputs	1-2	180 mA	125 mA
Digital output module, configurable, relay outputs	1	180 mA	125 mA
Analog output module	1-2	110 mA	800 mA
Digital input module	1-2	30 mA	125 mA
BDA PLUS	1	250 mA	350 mA

Connection of several SENTRON WLs

To connect several SENTRON WL circuit breakers to a power supply, the aggregates of the continuous currents and start-up currents must be taken into account.

SITOP Power power supply

The appropriate power supplies can be selected from the Siemens SITOP Power range.

Example:

A switch consists of an ETU745, BSS, COM16, metering function, and output module with relay contacts.

The maximum continuous current is 585 mA, and the maximum start-up current is 2635 mA. That is, a SITOP Power 2 is sufficient for power supply. For one or more SENTRON WLs, a power supply from the SITOP range can be selected. You can find further technical data in the Catalog KT 10.1 or in the online Mall (https://mall.automation.siemens.com).

The table below provides the values for selecting the power supply with SITOP:

Table 3- 24 Power supply from the SITOP range for SENTRON WL with CubicleBUS

Max. continuous current	Max. start-up current	Type	Order number
0 to 2 A	Up to 7 A up to 300 ms	SITOP Power 2	6EP1332-2BA10
2 to 5 A	Up to 20 A up to 350 ms	SITOP Power 5	6EP1333-2BA01
5 to 10 A	Up to 38 A up to 200 ms	SITOP Power 10	6EP1334-2BA01

SENTRON VL 4

4.1 Brief description

4.1.1 Brief description of SENTRON VL

Thanks to their compact design, the SENTRON VL160 to VL1600 and SENTRON VL150 UL to 1600 UL circuit breakers meet the high requirements of today's electrical distribution systems. They are available both with thermo-magnetic overcurrent trip units (16 A to 630 A), and with solid-state overcurrent trip units (63 A to 1600 A). Depending on the desired level of diversity of the data, the SENTRON VL can be connected via the COM21 module, depending on the ETU used.

General information

The basic circuit breaker is designed for fixed mounting and can be easily changed to a plug-in version or a withdrawable version using the appropriate kit. The available 3-pole and 4-pole SENTRON VL circuit breakers are especially suitable for applications in the area of plant, motor or generator protection, in starter combinations or as non-automatic air circuit breakers.

Note

Validity of the values

The values specified in this chapter apply only for the ETUs with the order numbers 3VLxxx-xMxxx, 3VLxxx-xNxxx, 3VLxxx-xUxx, or 3VLxxx-xJxx. For other order numbers, the values given may vary slightly.

Connection

Depending on the ETU used, the SENTRON VL can be connected via the Modbus RTU module COM21. It is also possible to run communication at a higher level (Ethernet/intranet/Internet) using the BDA PLUS (Breaker Data Adapter PLUS).

Accessories

Interlocking and locking options ensure increased safety in critical processes. The accessories, from the auxiliary trip unit and motorized operating mechanisms to the communication system, are simple and easy to retrofit.

System architecture

The system architecture of the SENTRON VL enables communication via Modbus RTU. A shared profile together with the SENTRON WL enables use of shared programs both in a PLC and on a PC.

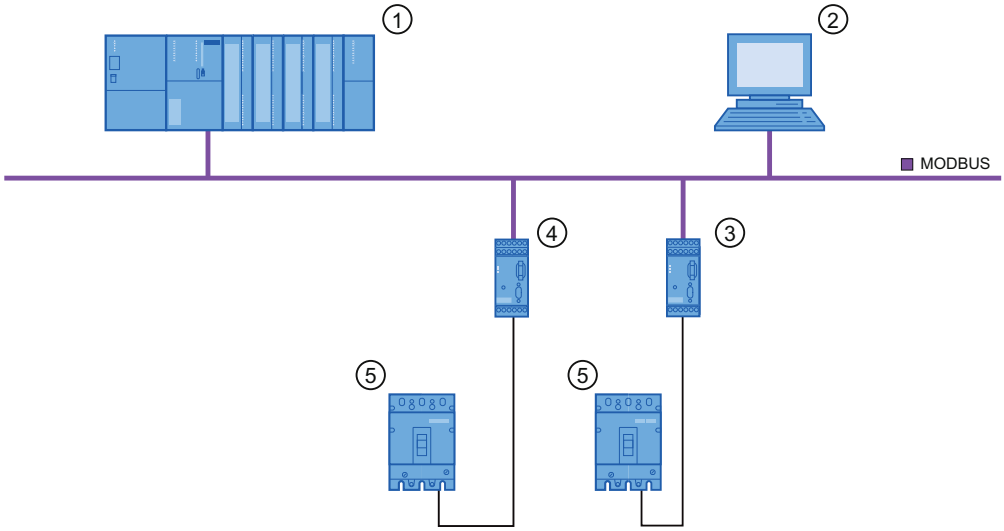

① PLC, e.g. SIMATIC S7
② Customer-specific software
③ COM21 (not with LCD ETU)
④ COM21 from Release 2
⑤ SENTRON VL with ETU

Figure 4-1 System architecture of the SENTRON VL

4.1.2 Overview of the accessories

There is a host of accessories available for the SENTRON VL circuit breakers. There are:

- External accessories, e.g. overcurrent release, Modbus RTU module, COM21, and front rotary operating mechanism. External accessories are mounted outside the SENTRON VL.
- Internal accessories, e.g. alarm switches, shunt releases. Internal accessories are mounted inside the SENTRON VL under the front plate in "compartments". This means no additional space is required. The compartments are located to the left and right of the toggle handle. It must be noted here that certain internal accessories must only be mounted in certain compartments (see the paragraph "Installing components in the accessory compartments")!

The figure below shows an overview of the accessories of the SENTRON VL:

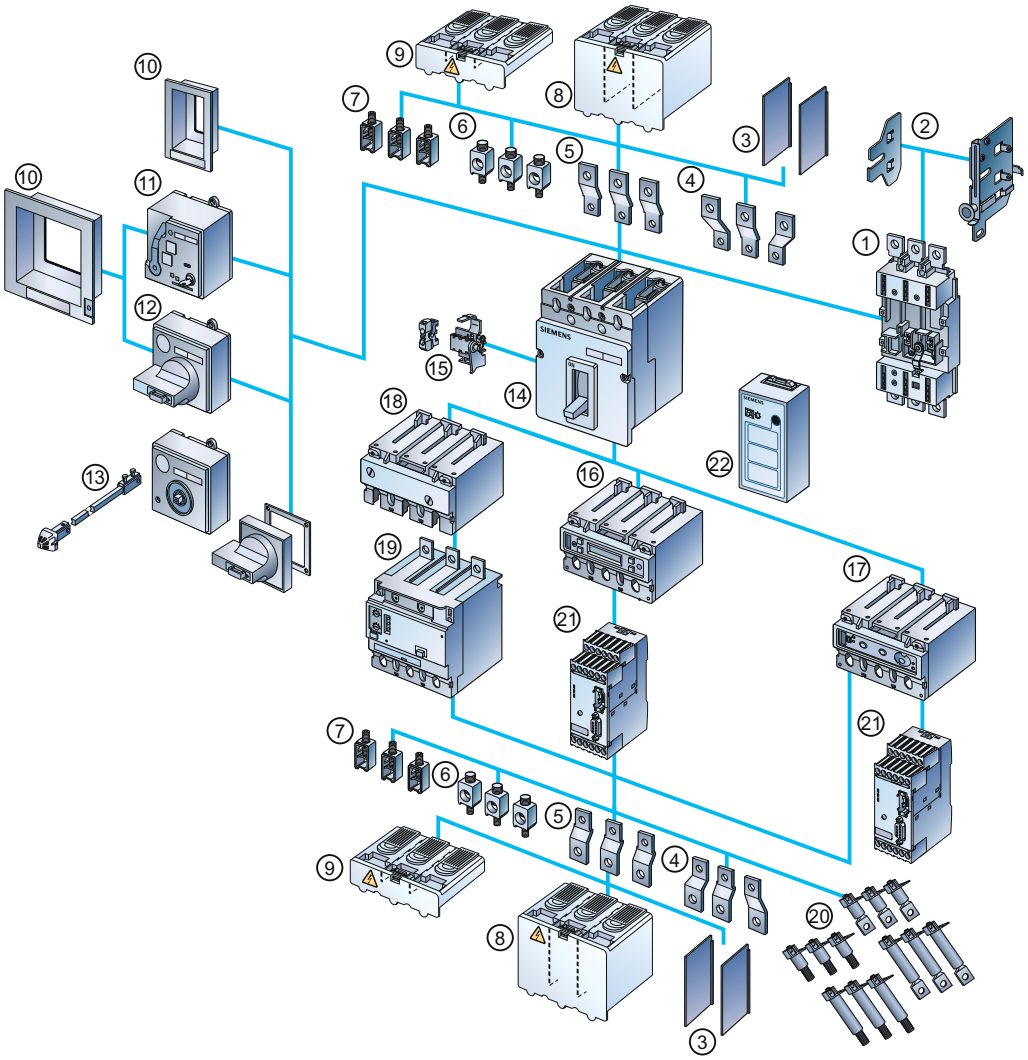

① Withdrawable/plug-in socket
② Withdrawable side panels
③ Phase barriers
④ Flared busbars
⑤ Straight connection bars
⑥ Multiple feed-in terminal for Al/Cu
⑦ Box terminal for Cu
⑧ Extended terminal cover
⑨ Standard terminal cover
⑩ Masking/cover frame for door cut-out
⑪ Stored-energy motorized operating mechanism
⑫ Front rotary operating mechanism
⑬ Door-coupling rotary operating mechanism
⑭ SENTRON 3VL circuit breaker
⑮ Internal accessories
⑯ Solid-state overcurrent trip unit LCD ETU
⑰ Solid-state overcurrent trip unit with communication function
⑱ Thermal/magnetic overcurrent release
⑲ RCD module
⑳ Rear terminals – flat and round
㉑ COM21 communication module for Modbus RTU
㉒ Battery power supply with test function for electronic trip unit

Figure 4-2 SENTRON VL, accessories

4.1.3 Properties of the trip units

Every trip unit of the SENTRON VL can in principle be enabled for communication with the appropriate accessories. However, they vary in their equipment (such as the display) and in the available options for setting the protection parameters (rotary coding switch, keyboard, software).

4.1.4 Electronic overcurrent tripping systems

The electronic overcurrent tripping systems **ETU** and **LCD ETU** are suitable for rated currents in the range from 63 A to 1600 A.

The difference between the two ETUs is that on the ETU without LCD, the settings for tripping current, delay time, etc. must be made using the rotary coding switch.

By contrast, on the SENTRON VL with LCD ETU, the settings can be made conveniently using a menu-prompted display that also shows current values during operation such as those for the current of individual phases.

ETU

On the electronic trip units with rotary coding switch (ETU), the COM21 is required for connecting to Modbus RTU.

LCD ETU

On the electronic trip units with display (LCD ETU), connection is possible via the Modbus RTU module COM21 from Release 2.

4.1.5 Protection functions

The table below shows the protection functions of the different trip units and their setting ranges.

Overcurrent releases VL160 to VL1600 - Function overview

Order No. supplement	Releases	System protection	Starter/generator protection	Motor protection	Starter protection	Non-automatic circuit breakers	Function	Setting options					
								L Overload protection	S[1] Short-circuit protection (short-time delayed)		I[1] Short-circuit protection (instantaneous)	G Ground-fault protection	
								$I_r = \times I_n$	$I_{sd} = \times I_r$	t_{sd}[s]	$I_i = \times I_n$	$I_g = \times I_n$	t_g[s]
DK	M	--	--	--	✓	--	I	--	--	--	7 ... 15	--	--
DE	M	--	--	--	--	✓	I	--	--	--	8 ... 18	--	--
EE	M	--	--	--	--	✓	I	--	--	--	8 ... 18	--	--
DA	TM[2]	✓	--	--	--	--	LI	1	--	--	9 ... 18[4]	--	--
DD	TM[2]	✓	--	--	--	--	LI	0.8 ... 1	--	--	9 ... 18[4]	--	--
DC	TM[2]	✓	--	--	--	--	LI	0.8 ... 1	--	--	5 ... 10	--	--
EH	TM[2]	✓	--	--	--	--	LI	1	--	--	9 ... 18[4]	--	--
EJ	TM[2]	✓	--	--	--	--	LI	0.8 ... 1	--	--	5 ... 10	--	--
EA	TM[2]	✓	--	--	--	--	LIN	1	--	--	9 ... 18[4]	--	--
EC	TM[2]	✓	--	--	--	--	LIN	0.8 ... 1	--	--	5 ... 10	--	--
EM	TM[2]	✓	--	--	--	--	LIN	0.8 ... 1	--	--	5 ... 10	--	--
SP	ETU10M[3]	--	--	✓	--	--	LI	0.4 ... 1	--	--	1.25 ... 11	--	--
MP	ETU10M[3]	--	--	✓	--	--	LI	0.4 ... 1	--	--	1.25 ... 11	--	--
SB	ETU10	✓	--	--	--	--	LI	0.4 ... 1	--	--	1.25 ... 11	--	--
MB	ETU10	✓	--	--	--	--	LI	0.4 ... 1	--	--	1.25 ... 11	--	--
LB	ETU10	✓	--	--	--	--	LI	0.4 ... 1	--	--	1.25 ... 11	--	--
TA	ETU10	✓	--	--	--	--	LIN	0.4 ... 1	--	--	1.25 ... 11	--	--
NA	ETU10	✓	--	--	--	--	LIN	0.4 ... 1	--	--	1.25 ... 11	--	--
LA	ETU10	✓	--	--	--	--	LIN	0.4 ... 1	--	--	1.25 ... 11	--	--
TB	ETU10	✓	--	--	--	--	LI	0.4 ... 1	--	--	1.25 ... 11	--	--
NB	ETU10	✓	--	--	--	--	LI	0.4 ... 1	--	--	1.25 ... 11	--	--
SL	ETU12	✓	--	--	--	--	LIG	0.4 ... 1	--	--	1.25 ... 11	0.6 ... 1, OFF	0.1 ... 0.3
ML	ETU12	✓	--	--	--	--	LIG	0.4 ... 1	--	--	1.25 ... 11	0.6 ... 1, OFF	0.1 ... 0.3
SF	ETU12	✓	--	--	--	--	LIG	0.4 ... 1	--	--	1.25 ... 11	0.6 ... 1, OFF	0.1 ... 0.3
MF	ETU12	✓	--	--	--	--	LIG	0.4 ... 1	--	--	1.25 ... 11	0.6 ... 1, OFF	0.1 ... 0.3
TN	ETU12	✓	--	--	--	--	LING	0.4 ... 1	--	--	1.25 ... 11	0.6 ... 1, OFF	0.1 ... 0.3
NN	ETU12	✓	--	--	--	--	LING	0.4 ... 1	--	--	1.25 ... 11	0.6 ... 1, OFF	0.1 ... 0.3
SE	ETU20	--	✓	--	--	--	LSI	0.4 ... 1	1.5 ... 10	0 ... 0.5	11	--	--
ME	ETU20	--	✓	--	--	--	LSI	0.4 ... 1	1.5 ... 10	0 ... 0.5	11	--	--
LE	ETU20	--	✓	--	--	--	LSI	0.4 ... 1	1.5 ... 10	0 ... 0.5	11	--	--
TE	ETU20	--	✓	--	--	--	LSI	0.4 ... 1	1.5 ... 10	0 ... 0.5	11	--	--
NE	ETU20	--	✓	--	--	--	LSI	0.4 ... 1	1.5 ... 10	0 ... 0.5	11	--	--
TF	ETU20	--	✓	--	--	--	LSIN	0.4 ... 1	1.5 ... 10	0 ... 0.5	11	--	--
NF	ETU20	--	✓	--	--	--	LSIN	0.4 ... 1	1.5 ... 10	0 ... 0.5	11	--	--
LF	ETU20	--	✓	--	--	--	LSIN	0.4 ... 1	1.5 ... 10	0 ... 0.5	11	--	--
SG	ETU22	--	✓	--	--	--	LSIG	0.4 ... 1	1.5 ... 10	0 ... 0.5	11	0.6 ... 1, OFF	0.1 ... 0.3
MG	ETU22	--	✓	--	--	--	LSIG	0.4 ... 1	1.5 ... 10	0 ... 0.5	11	0.6 ... 1, OFF	0.1 ... 0.3
SH	ETU22	--	✓	--	--	--	LSIG	0.4 ... 1	1.5 ... 10	0 ... 0.5	11	0.6 ... 1, OFF	0.1 ... 0.3
MH	ETU22	--	✓	--	--	--	LSIG	0.4 ... 1	1.5 ... 10	0 ... 0.5	11	0.6 ... 1, OFF	0.1 ... 0.3
TH	ETU22	--	✓	--	--	--	LSING	0.4 ... 1	1.5 ... 10	0 ... 0.5	11	0.6 ... 1, OFF	0.1 ... 0.3
NH	ETU22	--	✓	--	--	--	LSING	0.4 ... 1	1.5 ... 10	0 ... 0.5	11	0.6 ... 1, OFF	0.1 ... 0.3
SS	ETU30M[3]	--	--	✓	--	--	LI	0.4 ... 1	--	--	6/8/11	--	--
MS	ETU30M[3]	--	--	✓	--	--	LI	0.4 ... 1	--	--	6/8/11	--	--
LS	ETU30M[3]	--	--	✓	--	--	LI	0.4 ... 1	--	--	6/8/11	--	--
UP	LCD ETU40M[3]	--	--	✓	--	--	LI	0.4 ... 1	--	--	1.25 ... 11	--	--
UH	LCD ETU40	--	✓	--	--	--	LI, LS, LSI	0.4 ... 1	1.5 ... 10	0 ... 0.5	1.25 ... 11	--	--
UJ	LCD ETU40	--	✓	--	--	--	LI, LSI, LIN, LSIN	0.4 ... 1	1.5 ... 10	0 ... 0.5	1.25 ... 11	--	--
UL	LCD ETU42	--	✓	--	--	--	LSIG	0.4 ... 1	1.5 ... 10	0 ... 0.5	1.25 ... 11	0.4 ... 1	0.1 ... 0.5
UM	LCD ETU42	--	✓	--	--	--	LSIG	0.4 ... 1	1.5 ... 10	0 ... 0.5	1.25 ... 11	0.4 ... 1	0.1 ... 0.5
UN	LCD ETU42	--	✓	--	--	--	LSIG, LSING	0.4 ... 1	1.5 ... 10	0 ... 0.5	1.25 ... 11	0.4 ... 1	0.1 ... 0.5

1) Size-dependent

2) TM up to In = 630 A

3) Motor protection up to In = 500 A

General data

Order No. supplement	Releases	Thermal image	Phase failure	Communication-capable	Ground-fault protection	Number of poles	N pole protected[1]	I^4t (ON/OFF)	Trip class (t_C)	Time-lag class (t_R)	Thermal-magnetic releases	Magnetic releases	Electronic release	LCD display
DK	M	--	--	--	--	3	--	--	--	--	--	✓	--	--
DE	M	--	--	--	--	3	--	--	--	--	--	✓	--	--
EE	M	--	--	--	--	4	--	--	--	--	--	✓	--	--
DA	TM[2]	✓	--	--	--	3	--	--	--	--	✓	--	--	--
DD	TM[2]	✓	--	--	--	3	--	--	--	--	✓	--	--	--
DC	TM[2]	✓	--	--	--	3	--	--	--	--	✓	--	--	--
EH	TM[2]	✓	--	--	--	4	--	--	--	--	✓	--	--	--
EJ	TM[2]	✓	--	--	--	4	--	--	--	--	✓	--	--	--
EA	TM[2]	✓	--	--	--	4	100 %	--	--	--	✓	--	--	--
EC	TM[2]	✓	--	--	--	4	60 %	--	--	--	✓	--	--	--
EM	TM[2]	✓	--	--	--	4	100 %	--	--	--	✓	--	--	--
SP	ETU10M[3]	✓	40 % I_R	--	--	3	--	--	10	--	--	--	✓	--
MP	ETU10M[3]	✓	40 % I_R	✓	--	3	--	--	10	--	--	--	✓	--
SB	ETU10	✓	--	--	--	3	--	--	--	2.5 ... 30	--	--	✓	--
MB	ETU10	✓	--	✓	--	3	--	--	--	2.5 ... 30	--	--	✓	--
LB	ETU10	✓	--	--	--	3	--	--	--	2.5 ... 30	--	--	✓	--
TA	ETU10	✓	--	--	--	4	50/100 %	--	--	2.5 ... 30	--	--	✓	--
NA	ETU10	✓	--	✓	--	4	50/100 %	--	--	2.5 ... 30	--	--	✓	--
LA	ETU10	✓	--	--	--	4	50/100 %	--	--	2.5 ... 30	--	--	✓	--
TB	ETU10	✓	--	--	--	4	--	--	--	2.5 ... 30	--	--	✓	--
NB	ETU10	✓	--	✓	--	4	--	--	--	2.5 ... 30	--	--	✓	--
SL	ETU12	✓	--	--	①	3	--	--	--	2.5 ... 30	--	--	✓	--
ML	ETU12	✓	--	✓	①	3	--	--	--	2.5 ... 30	--	--	✓	--
SF	ETU12	✓	--	--	②	3	--	--	--	2.5 ... 30	--	--	✓	--
MF	ETU12	✓	--	✓	②	3	--	--	--	2.5 ... 30	--	--	✓	--
TN	ETU12	✓	--	--	②	4	50/100 %	--	--	2.5 ... 30	--	--	✓	--
NN	ETU12	✓	--	✓	②	4	50/100 %	--	--	2.5 ... 30	--	--	✓	--
SE	ETU20	✓	--	--	--	3	--	✓	--	--	--	--	✓	--
ME	ETU20	✓	--	✓	--	3	--	✓	--	--	--	--	✓	--
LE	ETU20	✓	--	--	--	3	--	✓	--	--	--	--	✓	--
TE	ETU20	✓	--	--	--	4	--	✓	--	--	--	--	✓	--
NE	ETU20	✓	--	✓	--	4	--	✓	--	--	--	--	✓	--
TF	ETU20	✓	--	--	--	4	50/100 %	✓	--	--	--	--	✓	--
NF	ETU20	✓	--	✓	--	4	50/100 %	✓	--	--	--	--	✓	--
LF	ETU20	✓	--	--	--	4	50/100 %	✓	--	--	--	--	✓	--
SG	ETU22	✓	--	--	①	3	--	✓	--	--	--	--	✓	--
MG	ETU22	✓	--	✓	①	3	--	✓	--	--	--	--	✓	--
SH	ETU22	✓	--	--	②	3	--	✓	--	--	--	--	✓	--
MH	ETU22	✓	--	✓	②	3	--	✓	--	--	--	--	✓	--
TH	ETU22	✓	--	--	②	4	50/100 %	✓	--	--	--	--	✓	--
NH	ETU22	✓	--	✓	②	4	50/100 %	✓	--	--	--	--	✓	--
SS	ETU30M[3]	✓	40 % I_R	--	--	3	--	--	10, 20, 30	--	--	--	✓	--
MS	ETU30M[3]	✓	40 % I_R	✓	--	3	--	--	10, 20, 30	--	--	--	✓	--
LS	ETU30M[3]	✓	40 % I_R	--	--	3	--	--	10, 20, 30	--	--	--	✓	--
UP	LCD ETU40M[3]	✓	5 ... 50 % I_R	✓[4]	--	3	--	--	5, 10, 15, 20, 30	--	--	--	✓	✓
UH	LCD ETU40	✓	--	✓[4]	--	3	--	✓	--	2.5 ... 30	--	--	✓	✓
UJ	LCD ETU40	✓	--	✓[4]	--	4	50 ... 100 %, OFF	✓	--	2.5 ... 30	--	--	✓	✓
UL	LCD ETU42	✓	--	✓[4]	①	3	--	✓	--	2.5 ... 30	--	--	✓	✓
UM	LCD ETU42	✓	--	✓[4]	①/③	3	--	✓	--	2.5 ... 30	--	--	✓	✓
UN	LCD ETU42	✓	--	✓[4]	②	4	50 ... 100 %, OFF	✓	--	2.5 ... 30	--	--	✓	✓

1)	Size-dependent		Ground-fault protection
2)	TM up to I_n = 630 A	①	Vectorial summation current formation (3-conductor system)
3)	Motor protection up to I_n = 500 A	②	Vectorial summation current formation (4-conductor system)
4)	With COM20/COM21	③	Direct recording of the ground-fault current in the neutral point of the transformer

4.1.6 Data transfer by means of Modbus RTU

Data of the SENTRON VL circuit breaker can be transferred via Modbus RTU via the COM21 (depending on the ETU).

Connection via the COM21 module

The COM21 module is connected to the ETU of the SENTRON VL. All the available data (see table below) is read from the trip unit and made available on the bus via this connection. This option provides a direct communication link between the SENTRON VL and Modbus RTU. The SENTRON VL circuit breaker must be equipped with a communication-enabled ETU for connection to the COM21.

Table 4- 1 Connection of the SENTRON VL trip units

Transferrable data	LCD ETU + COM21 from R2	ETU + COM21
Switching on or off (in conjunction with a motorized operating mechanism)	✓	✓
Delete trip memory	✓	✓
Delete max. measured values	✓	✓
Delete maintenance information	✓	✓
ON or OFF status	✓	✓
Tripped signals	✓	✓
Tripped signals with cause of tripping operation, tripping current and time stamp	✓	✓
Alarm (e.g. overload)	✓	✓
Alarms with time stamp (e.g. overload, phase unbalance current, etc.)	✓	
Threshold violation with time stamp (e.g. phase currents)		
Max. phase current of a phase	✓	✓
Phase currents with max. value and time stamp	✓	✓
Neutral conductor current with min./max. value and time stamp	✓	max. only*
Read/write to LCD ETU	✓	
Read ETU		✓
Number and type of tripping operations: L, S, G	✓	✓
Operating hours	✓	✓
Type of trip unit: LSIG	✓	✓
3/4-pole switch	✓	✓
Current sensor rating	✓	✓
Serial no. of the trip unit	✓	✓
Software version of the trip unit	✓	✓
Time synchronization	✓	✓
ZSI functionality	✓	✓

* without time stamp

See also

powerconfig (Page 147)

4.2 COM21 connection

4.2.1 Data exchange with the COM21

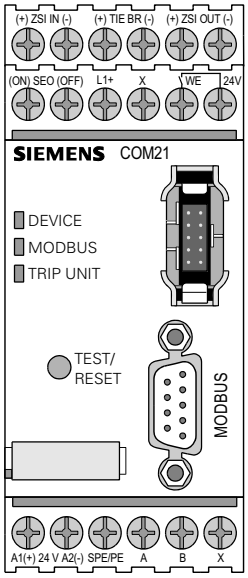

Figure 4-3 MODBUS COM21

Data exchange can be customized by the customer. For details of the available functions see Modbus RTU data transfer (Page 123) and Data library (Page 157)

Interlocking and securing

If security considerations demand it, it is possible to lock control/write access to the circuit breaker via hardware and software using a hardware wire jumper (WE terminal).

For the purpose, for example, of preventing switching via MODBUS (manual/automatic mode with connected motorized operating mechanism) or modification of parameters.

Time stamp

All important events are provided with a time stamp (time stamp for tripping operations, time stamp for maximum values) by the integral clock to enable tracing of the precise course of a fault, for example. The clock can be synchronized with the clock of the automation system by means of a simple mechanism.

4.2.2 Setting the MODBUS address of the COM21

When configuring the COM21 for data exchange, you must note that the COM21 is supplied as standard with the MODBUS address 126. This must then be changed by the user when configuring the system.

The address can be set or changed via the *powerconfig* software or the "addressing plug" (3UF7910-0AA00-0). The address is set at the addressing plug and the addressing plug is connected with the COM21 (above the Modbus interface). The TEST / RESET button on the COM21 must be pressed for approximately 3 seconds. As soon as the address has been transferred, the LED DEVICE flashes and the addressing plug can be removed again.

Example
MODBUS address: 58

1 OFF
2 **ON**
4 OFF
8 **ON**
16 **ON**
32 **ON**
64 OFF

2 + 8 + 16 + 32 = 58

Note

Addressing plug

The addressing plug (3UF7910-0AA00-0) must be ordered once.

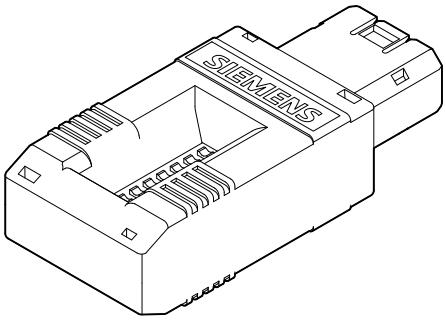

Figure 4-4 Addressing plug

4.2.3 COM21 pin assignment

The COM21 must be supplied with 24 V DC for operations and this must be applied to the terminals A2 (ground) and A1 (+). This voltage is looped-through via the communication cable to the ETU (trip unit) of the 3VL switch such that this is also operated when the main contacts are open. Without this supply the ETU would not be able to communicate diagnostics information, such as the reason for the last tripping operation if there is no internal supply.

The auxiliary switch and alarm switch are wired direct to the ETU and then activated in the LCD menu of the ETU. This makes the status available via the communication system by means of COM21.

The figure below shows the principle of the connection between the COM21 and a SENTRON VL including the LEDs and the write protection WriteEnable.

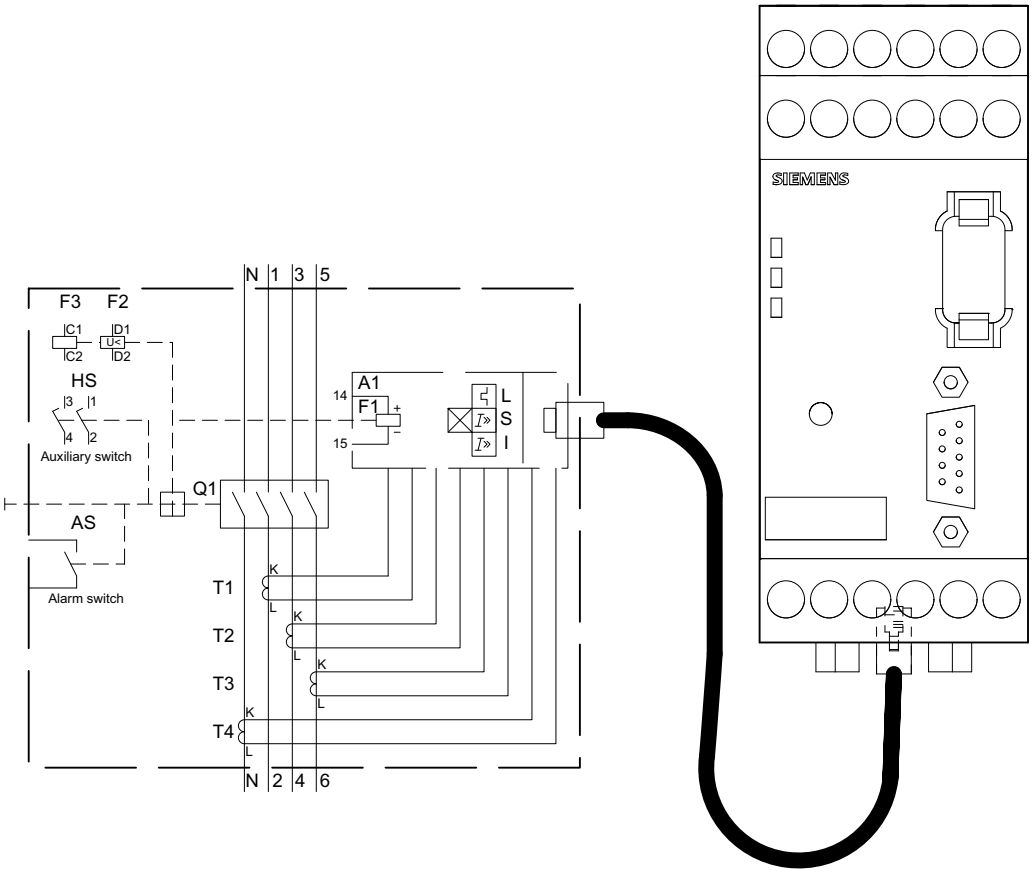

Figure 4-5 COM21 connection to SENTRON VL

4.2.4 Write protection with COM21

In real applications in power distribution, it is necessary to disable write access via Modbus RTU temporarily or permanently, during maintenance work, for example.

You must ensure remote access is possible for setting the address and the trip unit values. For this, the inputs WE and 24 V DC (WriteEnable) on the COM21 must be jumpered or closed via a switch.

If this is not the case, no settings can be written to the COM21 and the LCD ETU. In addition, operation of the motorized operating mechanism via Modbus RTU is not possible.

4.2.5 Communication connection to the ETU

The next page contains a description of how to establish the communication link between the COM21 and the SENTRON VL with ETU.

The ON/OFF position (auxiliary switch), and the triggered signal (alarm switch) of the switch are signaled via the wiring of the ETU. In the case of ETUs with communication capability the auxiliary and alarm switches are factory installed and assigned to the accessory compartment (X2). You can find details in the operating instructions for the communication-capable, solid-state overcurrent trip unit (ETUs).

Different communication cables must be used depending on which SENTRON VL circuit breaker is used. A 1.5 m connecting cable is included with the communication-capable ETU. These cables are listed with their different lengths and switch assignments in the table below. They can be ordered as accessories.

Table 4- 2 Communication cables available for order

3VL9000-8AQ60	3VL4 - 1.5 m	JG - 59.05 in.
3VL9000-8AQ61	3VL4 - 3 m	JG - 118.1 in.
3VL9000-8AQ70	3VL5 / 3VL6 / 3VL7 / 3VL8 - 1.5 m	LG / MG / NG / PG - 59.05 in.
3VL9000-8AQ71	3VL5 / 3VL6 / 3VL7 / 3VL8 - 3 m	LG / MG / NG / PG - 118.1 in.
3VL9000-8AQ80	3VL2 / 3VL3 - 1.5 m	DG / FG - 59.05 in.
3VL9000-8AQ81	3VL2 / 3VL3 - 3 m	DG / FG - 118.1 in.

An extension of the cables beyond the specified dimensions is not permissible!

4.2.6 Connecting the optional motorized operating mechanism to COM21

If the circuit breaker is to be switched on or off via the bus, the electric motorized operating mechanism with spring energy store is needed.

Note

The contact between WE and 24 V must be closed for the remote function! Without this wire jumper, the SENTRON VL cannot be switched on or off via Modbus RTU.

More information on fitting the motorized operating mechanism can be found in the installation instructions for the motorized operating mechanism.

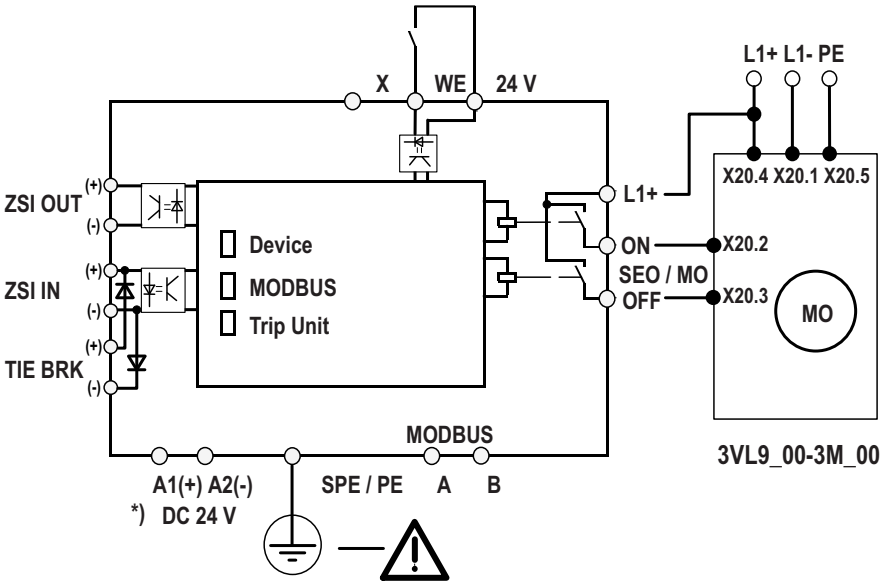

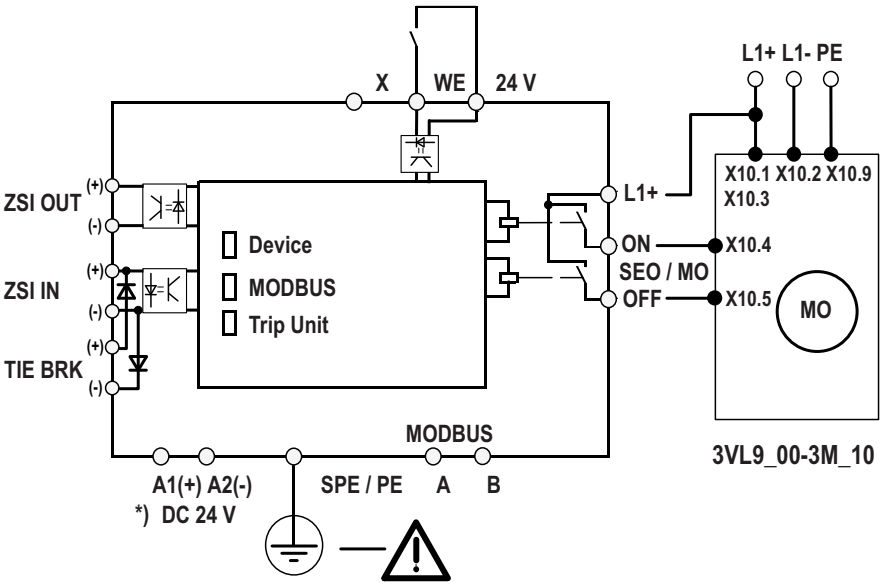

Figure 4-6 Connection diagram of the COM21 to the motorized operating mechanism, SENTRON VL

Table 4- 3 Connection of the motorized operating mechanism, SENTRON VL 3VL9_00-3M_00

	Motor	COM21	Power supply	
			DC	AC
L1–	X20.1		GND	N
S2A	X20.2	SEO (ON)		
S2B	X20.3	SEO (OFF)		
L1+	X20.4	L1+	L+	L
PE	X20.5		PE	PE

Table 4- 4 Connection of the motorized operating mechanism, SENTRON VL 3VL9_00-3M_10

	Motor	COM21	Power supply	
			DC	AC
L1 (L+)	X10.1	L1+	L+	L
N (L-)	X10.2		GND	N
L1 (L+)	X10.3	L1+	L+	L
S1 "ON"	X10.4	SEO (ON)		
S2 "OFF"	X10.5	SEO (OFF)		
PE	X10.9		PE	PE

Table 4- 5 Technical data of the COM21 module

Permissible ambient temperature	In operation	-25 °C...+70 °C, no condensation
	During storage and transportation	-40 °C...+80 °C
Installation altitude above sea level		< 2000 m
	Permissible max. ambient temperature +50 °C (no safe isolation)	< 3000 m
Weight		approx. 0.28 kg
Degree of protection according to IEC 60529		IP20
Shock resistance (sine pulse)		100 m/s^2 20 ms 220 m/s^2 11 ms
Mounting position		Arbitrary
Immunity to electromagnetic interference according to IEC 60947-1	Conducted interference; burst according to IEC 61000-4-4	2 kV (power ports) 2 kV (signal ports)
	Conducted interference; high-frequency according to IEC 61000-4-6	10 V
	Conducted interference; surge according to IEC 61000-4-5	1 kV (line to ground)
	Electrostatic discharge; ESD according to IEC 61000-4-2	8 kV (air discharge) 4 kV (contact discharge)
	Field-based interference suppression; radiated immunity according to IEC 61000-4-3	10 V/m
Immunity to electromagnetic interference according to IEC 60947-1	Conducted and radiated interference emission	DIN EN 55011, A /DIN EN 55022, A
Safe isolation according to IEC 60947-1	All circuits are safely isolated from the control circuit for the motor operator in accordance with IEC 60947-1 (terminal SEO (ON), SEO (OFF), L1+), that is, dimensioned with double creepages and clearances	
Fixing	Snap-mounted to 35 mm DIN rail or screw fixing via additional push-in lugs	
Indicator	Green/red/yellow "Device" LED	• Green: Ready • Red: Function test negative, device disabled • Yellow: Memory submodule or addressing plug detected • Off: No control supply voltage
	Green "MODBUS" LED	• Continuous light: - Communication with Modbus and delay time - automatic baud rate search successfully completed • Flashing: - Automatic baud rate search active • Off: - No communication with Modbus and delay time elapsed
	Green "Trip Unit" LED	• Flashing: ZSI input detected • Off: No communication with ETU

TEST / RESET key		Setting of the communication address of the side box
		ZSI function test
		Reset of the side box back to the start sequence
System interface	Front	10-pin system interface for connecting the addressing plug
	Bottom	RJ45 socket for communication link to ETU
MODBUS interface		Connection of the MODBUS cables via terminal connection A, B or 9-pin SUB-D socket
Operating voltage	U_S in accordance with DIN EN 61131-2 0.85 ... 1.2 x U_S	24 V DC
Power consumption		1.2 W
Current consumption	U_S = 24 V DC	Max. 50 mA
Rated insulating voltage	U_I	300 V (pollution degree 3)
Rated peak withstand voltage	U_{Imp}	4 kV
Relay outputs for controlling a motorized operating mechanism (3VL9x00-3Mx00) for VL160x and VL160-VL1600	Number	2 monostable relay outputs; isolated NO contacts
	ON duration	300 ms, fixed setting
	Rated short-circuit capacity	2 A
	Specified short-circuit protection	See operating instructions of the motorized operating mechanism used.
Output	ZSI OUT - Output for Zone Selective Interlocking (ZSI); max. 8 circuit breakers	
Inputs (binary)	1 input with its own supply (24 V DC) from the device electronics for the WE function (write protection for PROFIBUS DP/Modbus RTU)	
	H signal	U_{In}: 15...30 V; I_{In}: Typically 5 mA for 24 V
	L signal	U_{In}: 0...5 V; I_{In}: Typically 0.75 mA for 5 V
	ZSI IN - Input for Zone Selective Interlocking (ZSI); max. 20 circuit breakers	
Conductor cross-sections	Tightening torque	0.8...1.2 Nm
	Solid	1 x 0.5...4 mm^2; 2 x 0.5...2.5 mm^2
	Finely stranded with end sleeve	1 x 0.5...2.5 mm^2; 2 x 0.5...1.5 mm^2
	AWG cable (solid)	1 x AWG 20 to 12; 2 x AWG 20 to 14
	AWG cable (finely stranded)	1 x AWG 20 to 14; 2 x AWG 20 to 16

Note

Transmission line

It is recommended to transfer the ZSI signal via a twisted-pair signal line with a cross-section of at least 0.75 mm^2. The maximum length must not exceed 400 m. Recommended cable type: Shielded MSR cable LSYCY (2 x 0.75 mm^2); made by: Siemens

Note

The motorized operating mechanism via Modbus RTU must be in automatic mode for switching!

4.2.7 LED display on the COM21

To monitor whether the COM21 is ready for operation and data exchange is taking place, three LEDs designated TRIP UNIT, MODBUS und DEVICE are located on the front cover of the COM21. The operating statuses explained in the tables below can be read from these LEDs.

DEVICE LED

The DEVICE LED provides information on the status of the COM21.

Table 4- 6 DEVICE LED

DEVICE LED	Meaning
Off	No voltage on the COM21
Green steady light	COM21 is supplied, there is no fault, no addressing plug is connected
Steady yellow light	The addressing plug is connected; the address setting has not yet been read or stored in non-volatile memory.
Flashing yellow	The addressing plug is connected; the address setting has been read and stored in non-volatile memory.
Flashing red	The addressing plug is connected and has a fault.
Red rapid flashing	COM21 has a serious internal fault

MODBUS LED

The MODBUS LED shows the status of the Modbus RTU communication of the COM21 module.

Table 4- 7 MODBUS LED

MODBUS LED	Meaning
Off	No voltage on the COM21 No Modbus RTU communication: No communication to the COM21 active or delay time for new communication elapsed
Green	Existing Modbus RTU communication: Valid MODBUS message frame detected and wait time for new communication not elapsed.

LED TRIP UNIT (ETU)

The TRIP UNIT LED provides information on the status of the trip unit

Table 4- 8 LED TRIP UNIT (ETU)

ETU LED	Meaning
Off	No voltage on COM21; no communication or communication fault between the 3VL ETU and the COM21
Static green (steady light)	COM21 is supplied externally with 24 V DC; communication with 3VL ETU in order
Flashing green	The ZSI signal is active on the connected ETU (used as indicator for the ZSI test)

Zone Selective Interlocking

5

5.1 ZSI

With circuit breakers on several grading levels, the aim is to assign these selectively to each other so that in the event of an overcurrent only the circuit breaker immediately upstream switches off the overcurrent.

5.1.1 Selectivity

A plant with several protective devices switched in series is selective only if the protective device immediately in front of the fault location picks up in the event of an overcurrent and switches off the overcurrent alone. Branches not affected continue to be supplied.

5.1.2 Time selectivity

One method of achieving this aim in the short-circuit or ground fault is time selectivity of the circuit breakers.

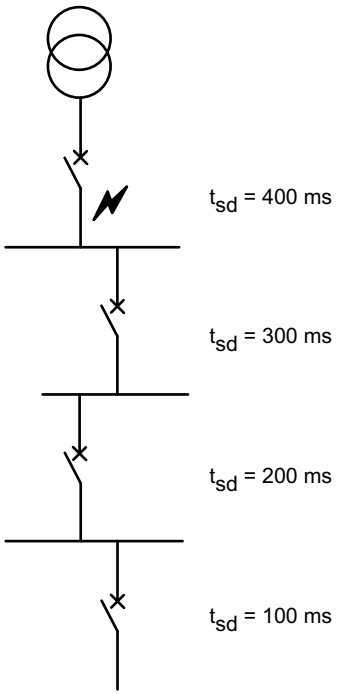

Figure 5-1 Example of time selectivity

This means each level of the circuit breaker receives another time delay (t_{sd}) that rises in the direction of the incoming supply. Tripping of the circuit breakers that are further removed from the short-circuit is thus delayed and the circuit breaker closest to the short-circuit is given time to switch the short-circuit off.

The disadvantage of such a system, however, is that one short-circuit trip is always delayed and that there is a long delay in switching off a short-circuit close to the infeed, and the plant is thus loaded with the short-circuit current for longer than necessary. This can require increased dimensioning of the system.

5.1.3 ZSI function

The ZSI function (ZSI = Zone Selective Interlocking) offers full selectivity with an extremely short delay time (t_{ZSI}) regardless of the number of grading levels and the location of the fault in the distribution system in the short-time-delayed S range and G range of the trip characteristic.

S range = short-time-delayed short-circuit protection	=> t_{ZSI} = 50 ms
G range = ground fault protection	=> t_{ZSI} = 100 ms

The benefit of ZSI is all the greater the higher the number of grading levels in large and meshed networks, and the longer the resulting delay times for standard time grading.

By shortening the break time, the ZSI function significantly reduces stress in the switchgear in the event of a short-circuit and/or ground fault.

Note

The ZSI function is only effective in the case of short-time-delayed short-circuit protection S up to the level of the preset maximum short-time-delayed short-circuit protection. If the short-circuit current exceeds this permissible maximum value, the short-circuit current is so great that instantaneous tripping of the circuit breaker always takes place in order to protect the system.

5.1.4 Operating principle

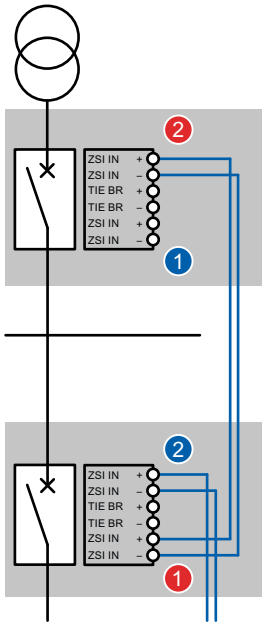

- Every circuit breaker is equipped with a ZSI module
- The ZSI modules are linked to each other via twisted-pair connections
- The ZSI output (ZSI OUT) ① is connected with the ZSI input (ZSI IN) ②
- ZSI modules in one grading level are switched in parallel (see examples)
- Coupling switches can be integrated (see examples)
- Medium voltage can be integrated (see examples)
- Extremely simple parameterization of the ZSI modules

5.1.5 Course over time

5.1.5.1 Condition ZSI = ON and presence of a short-circuit (S)

1. The overcurrent releases detect a short-circuit (S) and start the predefined delay times t_{sd}
2. Each circuit breaker that detects the short-circuit informs the higher-level breakers of the detected short-circuit (ZSI_OUT ⇒ ZSI_IN ⇒ ZSI_OUT ...)
3. Each circuit breaker that receives no information (ZSI IN) from subordinate grading levels and detects the short-circuit forces a short-circuit trip after 50 ms (t_{ZSI}).
4. Otherwise, a short-circuit trip occurs at the end of the delay time t_{sd}

Result: The ZSI module switches off the short-circuit after 50 ms in the next level to the fault.

5.1.5.2 Condition ZSI = ON and presence of a ground fault (G)

1. The overcurrent releases detect the ground fault and start the predefined delay times t_g = ground fault (G)
2. Each circuit breaker that detects the ground fault informs the higher-level breakers of the detected ground fault (ZSI_OUT ⇒ ZSI_IN ⇒ ZSI_OUT ...)
3. Each circuit breaker that receives no information (ZSI IN) from subordinate grading levels and detects the ground fault forces a short-circuit trip after 100 ms (t_{ZSI}).
4. Otherwise a trip occurs at the end of the delay time t_g (100 - 500 ms)

Result: The ZSI module switches off the ground fault after 100 ms in the next level to the fault.

Overview of the times:

t_{ZSI} = Guaranteed non-tripping time: 50 ms short-circuit/100 ms ground fault

t_{sd} = From 80 – 4000 ms depending on the tripping unit ETU

t_g = 100 – 500 ms

Plus the typical mechanical tripping time depending on the circuit breaker 20 – 40 ms

5.2 Examples

5.2.1 Function example

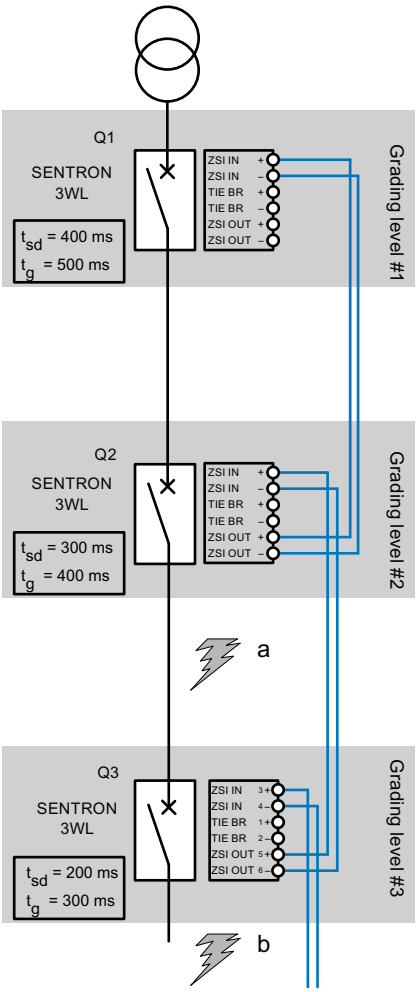

Example from the perspective of the circuit breaker (Q2). The operational principle of the ZSI is explained using the following graphic.

5.2.2 Tabular representation

5.2.2.1 Short-circuit

Tabular representation from the perspective of the circuit breaker Q2:

Table 5- 1 Short-circuit

ZSI ON / OFF	S	ZSI-IN	ZSI-OUT	Delay time	Time
OFF				t_{sd}	300 ms
OFF	X		X	t_{sd}	300 ms
ON		X		t_{sd}	300 ms
ON	X	X	X	t_{sd}	300 ms
ON				t_{ZSI}	50 ms
ON	X		X	t_{ZSI}	50 ms

5.2.2.2 Ground fault

Table 5- 2 Ground fault

ZSI ON / OFF	GF	ZSI-IN	ZSI-OUT	Delay time	Time
OFF				t_g	400 ms
OFF	X		X	t_g	400 ms
ON		X		t_g	400 ms
ON	X	X	X	t_g	400 ms
ON				t_{ZSI}	100 ms
ON	X		X	t_{ZSI}	100 ms

5.2.2.3 Example of 3 grading levels without coupling switch

The graphic below shows the functional principle of the ZSI function using an example in the power distribution system. Both SENTRON VL and SENTRON WL circuit breakers are used in different grading levels.

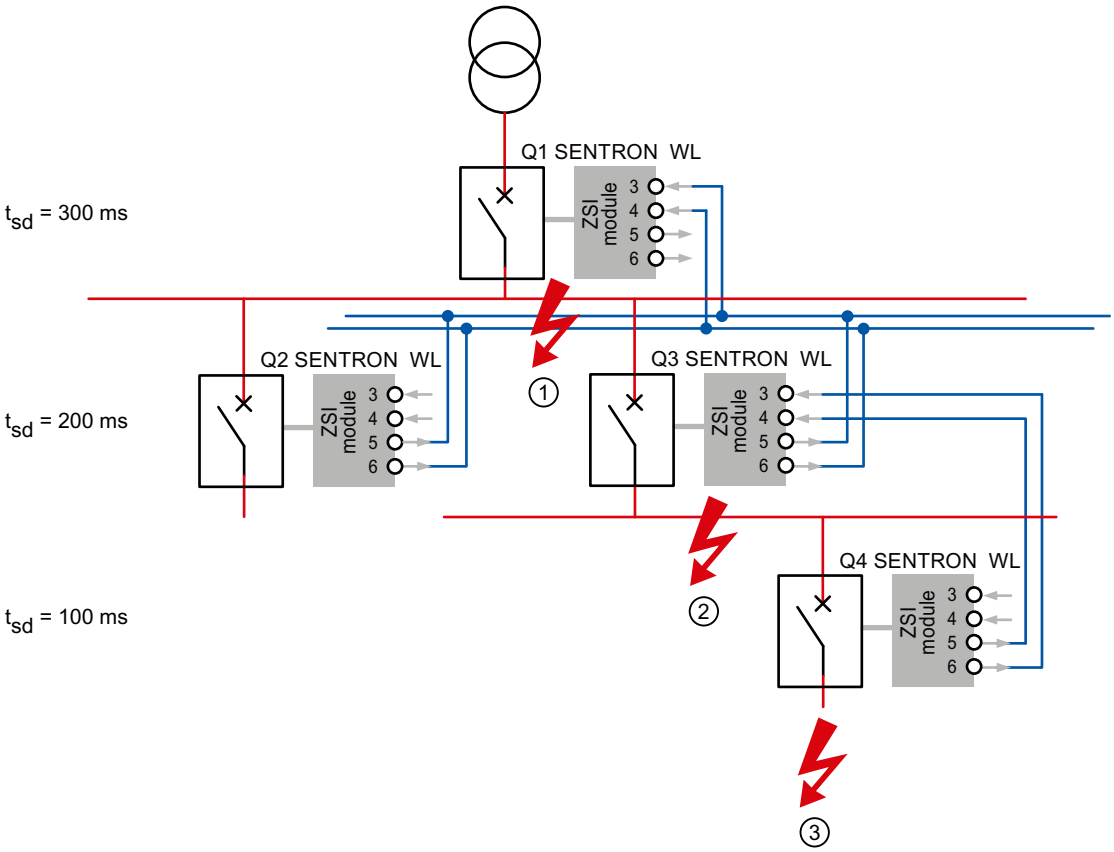

Short-circuit in grading level 3

- The switches Q4, Q3 and Q1 detect a short-circuit. Q4 informs Q3 and Q1 via the ZSI signal so that these do not trip in t_{ZSI} = 50 ms.
- Since Q4 in turn does not receive information (ZSI IN) from a subordinate breaker, it is responsible for switching off the short-circuit as quickly as possible (with delay time t_{ZSI} = 50 ms). If this does not happen because, for example, the switch is incapacitated, Q3 operates as a backup and trips after the time-selective setting time of t_{sd} = 200 ms.
- Although Q2 receives the ZSI-IN signal, it is not traversed by the overcurrent.
  For this reason, no action is taken with Q2.

Short-circuit in grading level 2

- Q1 and Q3 determine a short-circuit, Q4 does not. This is why Q3 also does not receive any ZSI information from Q4, but in turn provides ZSI information for Q1. On the basis of this information, Q3 knows that it is closest to the short-circuit and trips with a delay of t_{ZSI} = 50 ms instead of t_{sd} = 200 ms.
  Time saving = 150 ms.
- Although Q2 receives the ZSI-IN signal, it is not traversed by the overcurrent.
  For this reason, no action is taken with Q2.

Short-circuit in grading level 1

Only Q1 determines this short-circuit. It also does not receive information from a subordinate grading level, and therefore trips after t_{ZSI} = 50 ms.
Time saving = 250 ms.

5.2.2.4 Cancelation of the ZSI OUT signal

- ZSI OUT at short-circuit
  after removal of the short-circuit current, but after 100 ms at the earliest
- ZSI OUT at ground fault
  after removal of the ground fault current, but after 500 ms at the earliest
- MV OUT for medium voltage
  after removal of the overcurrent, but after 500 ms at the earliest
- The ZSI OUT signal is canceled at the latest after 3 s

5.2.2.5 Coupling switch

Wiring example of 3 grading levels with coupling switch

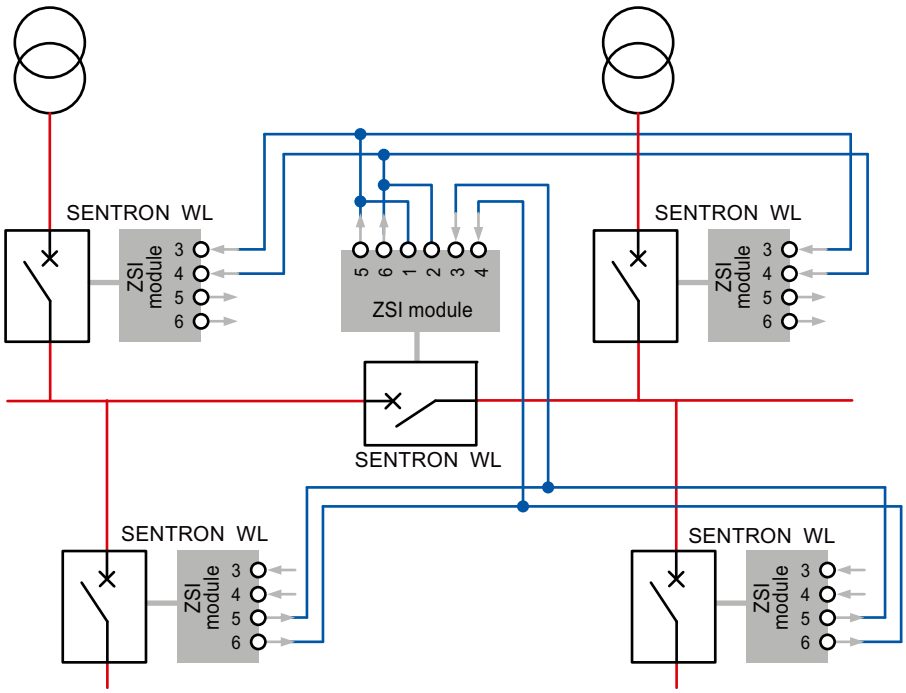

The **TIE BRKR** function (X4-1, 2) ensures that the **ZSI IN signal** (3, 4) is immediately forwarded to the output **ZSI OUT** (5, 6) even if the coupling switch is switched off. Without the TIE BRKR function, the ZSI signal would not be forwarded.

The coupling switch is a separate grading level and receives its own delay time t_{sd}.

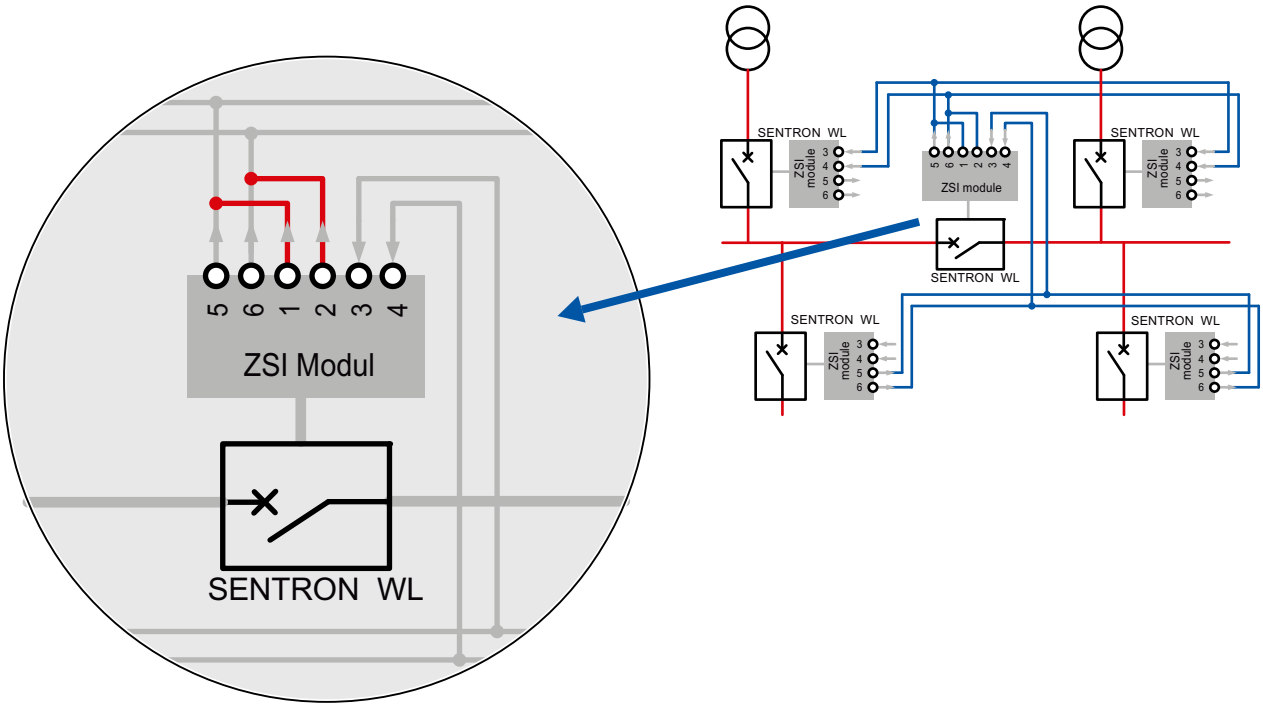

5.2.2.6 Wiring example

The example shows ZSI wiring and the set delay times in a mixed system with 3WL and 3VL.

Grading level 2 is a coupling switch. Coupling switches are treated as separate grading levels and receive their own delay time.

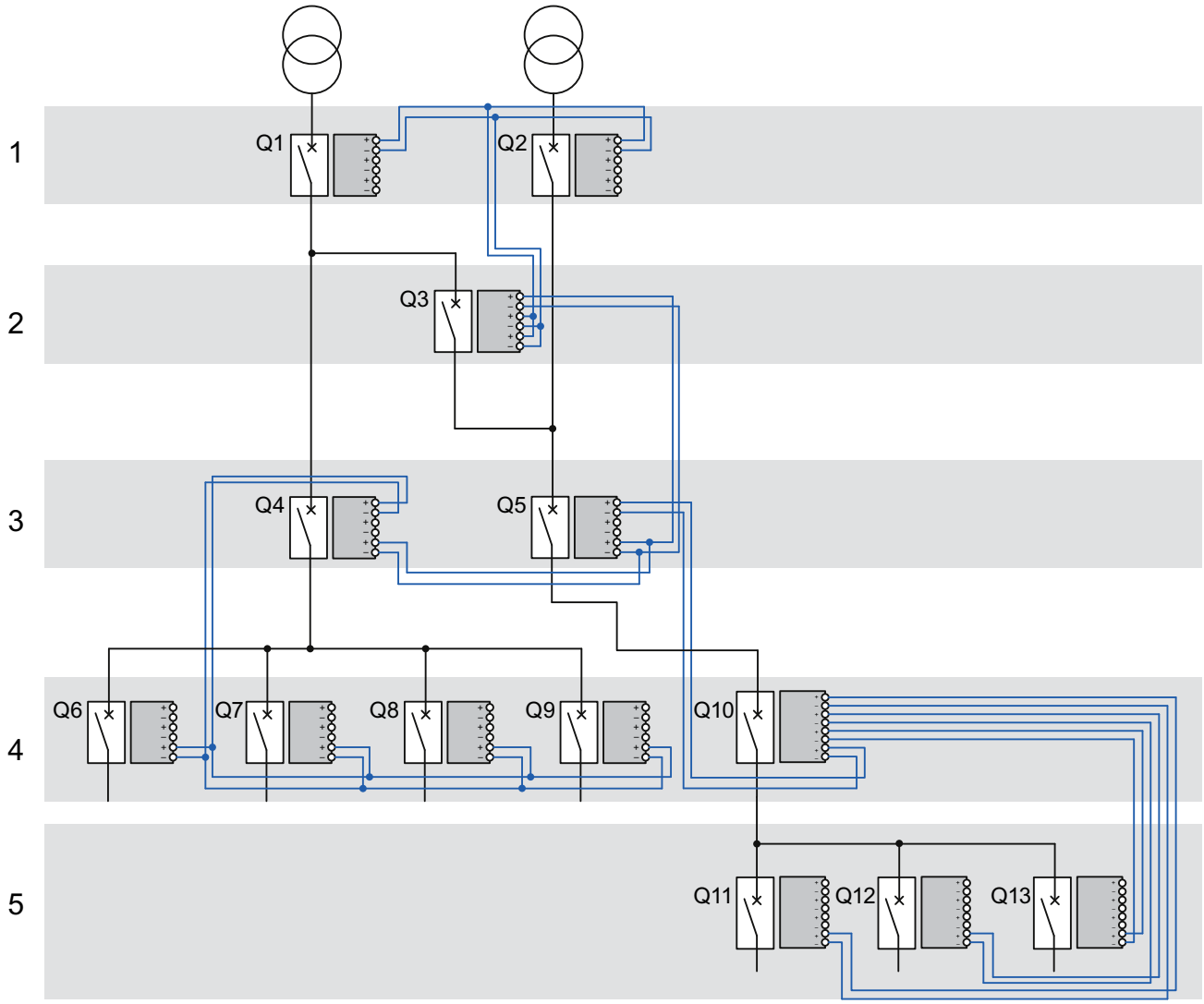

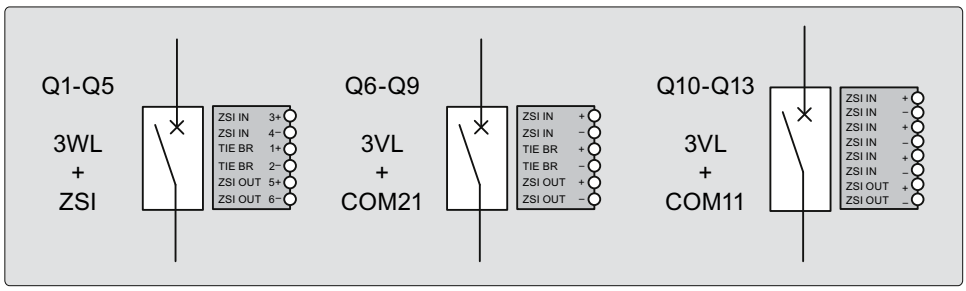

1	Q1 - Q2	t_{sd} = 400 ms
2	Q3	t_{sd} = 300 ms
3	Q4 - Q5	t_{sd} = 200 ms
4	Q6 - Q10	t_{sd} = 100 ms
5	Q11 - Q13	t_{sd} = 0 ms

5.2.2.7 Circuit breakers without ZSI function

Circuit breakers without ZSI function can be integrated into a system equipped with ZSI. However, they must have no delay time since otherwise the selectivity of the circuit breakers cannot be guaranteed.

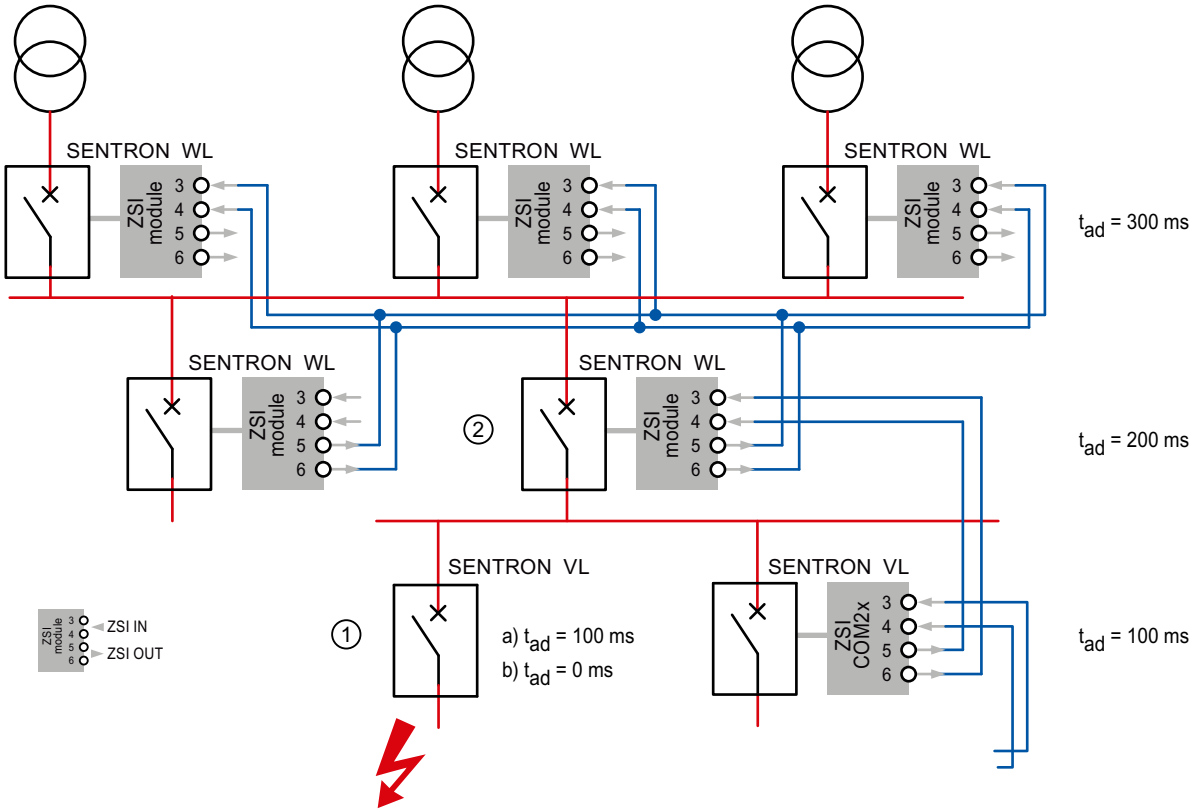

Short-circuit at circuit breaker ①

- t_{sd} = 100 ms
  Short-circuit at circuit breaker ①. Circuit breaker ① will switch off the short-circuit with a delay time t_{sd} of 100 ms. The short-circuit is also detected by circuit breaker ② and since no ZSI-IN signal is detected, switch-off is executed with a delay time t_{ZSI} of 50 ms.
  $t_{sd} > t_{ZSI}$
  100 ms ① > 50 ms ②
  ⇒ circuit breaker ② trips before circuit breaker ①.
  The short-circuit is switched off non-selectively.

- t_{sd} = 0 ms
  Short-circuit at circuit breaker ①. Circuit breaker ① will switch off the short-circuit with a delay time t_{sd} of 0 ms (instantaneous). The short-circuit is also detected by circuit breaker ② and since no ZSI-IN signal is detected, switch-off is executed with a delay time t_{ZSI} of 50 ms.
  $t_{ZSI} > t_{sd}$
  50 ms ② > 0 ms ①
  ⇒ circuit breaker ① trips before circuit breaker ②.
  The short-circuit is switched off selectively.

5.3 SENTRON 3WL

To be able to use the ZSI function on the SENTRON WL circuit breaker, the external CubicleBUS ZSI module must be used.

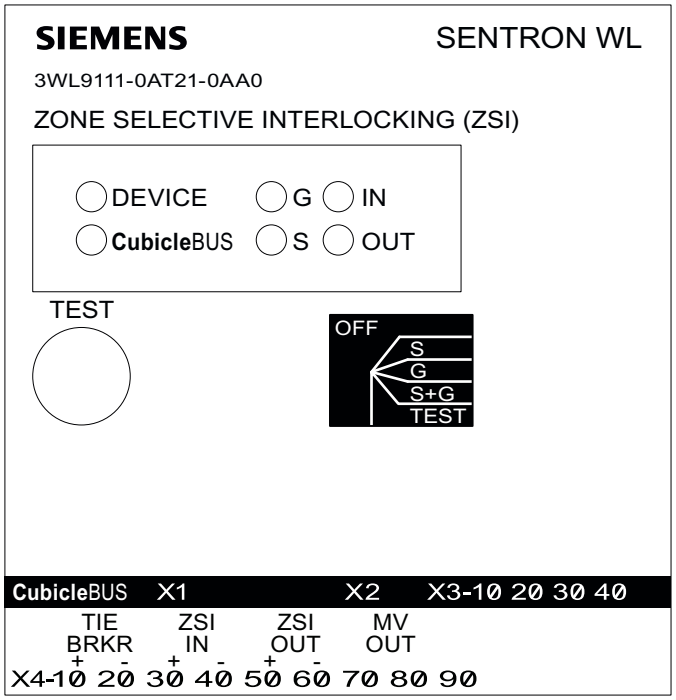

5.3.1 Technical data

Operating voltage on the CubicleBUS min./max. (V)	19.2 / 28.8
Current consumption from the CubicleBUS min./max. (mA)	31 / 61
Automatic resetting of the outputs after a maximum of	3 s
Shortest time that blocking signal is pending at the outputs LV	100 ms
Shortest time that blocking signal is pending at the outputs MV	500 ms
Typical tripping time including all delays	approx. 80 ms
Maximum number of switches that can be connected to ZSI IN	20
Maximum number of switches that can be connected to ZSI OUT	8
Maximum number of ZSI modules possible on one CubicleBUS	1
Maximum cable length with 2 x 0.75 mm^2	400 m
Power loss min./typ./max. (W)	0.8 / 1.76
Dimensions W/H/D (mm)	70 / 86 / 95
Weight (kg)	0.223
Temperature range (°C)	– 20 / 60

5.3.2 Applications

The function of ZSI can be used for the short-circuit between the phases (S), short-circuit to ground (G), or both simultaneously (S + G). The ZSI module provides ZSI information for the medium voltage level via the MV-OUT signal.

If a coupling switch is used in a power distribution system, it can be integrated into the ZSI concept.

5.3.3 Configuration

The operating mode is set using a rotary coding switch. If this is at the "OFF" position, the ZSI function is switched off.

5.3.4 Connection

The ZSI module must always be connected to COM1x or X8 as the first external CubicleBUS module.

Up to 20 circuit breakers can be connected in parallel to ZSI IN, and up to 8 circuit breakers can be connected in parallel to ZSI OUT.

5.3.5 Test function

The outputs are set in the "TEST" switch position on the rotary coding switch (that is, a blocking signal is sent to other breakers).

Pressing the "TEST" button switches the ZSI module to test mode. Test mode is indicated by the yellow DEVICE LED. The inputs and outputs are selected in the same way as on the digital input/output modules. If the input of the ZSI module is selected, the input can be activated by pressing and releasing the "TEST" button. If the outputs are selected, they can be activated by pressing and releasing the "TEST" button.

This makes it possible to check the cables.

The trip times can be checked with the function testing device (3WL9111-0AT44-0AA0).

5.3.6 LED

The activated inputs or outputs are indicated by a yellow LED.

5.4 SENTRON 3VL

5.4.1 COM20/COM 21

To be able to use the ZSI function on the SENTRON VL circuit breaker, the external communication module COM20 (PROFIBUS DP) or COM21 (Modbus RTU) and an ETU or LCD ETU with communication capability must be used.

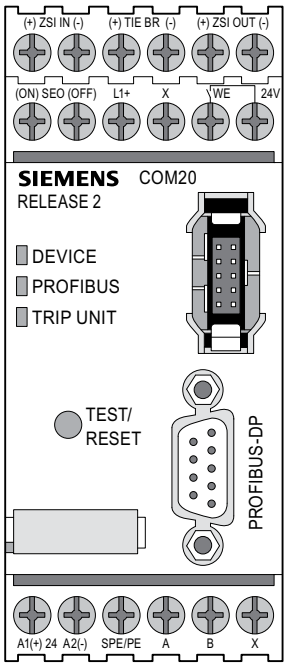

5.4.2 Technical data

Operating voltage min./max. (V)	20,4 / 28,8
Current consumption max. (mA)	50 mA
Automatic resetting of the outputs after a maximum of	3 s
Shortest time that blocking signal is pending at the outputs LV	100 ms
Typical tripping time including all delays	approx. 80 ms
Maximum number of switches that can be connected to ZSI IN	20
Maximum number of switches that can be connected to ZSI OUT	8
Maximum cable length with 2 x 0.75 mm^2	400 m
Power losses typ. [W]	1,2
Dimensions W/H/D (mm)	45 / 106 / 86
Weight (kg)	0,28
Temperature range (°C)	-25 / +70

Note

Cable type recommendation

It is recommended to transfer the ZSI signal via a twisted-pair signal line with a cross-section of at least 0.75 mm^2. The maximum length must not exceed 400 m. (Exception: If the higher-level breaker is equipped with a COM10, the maximum cable length is limited to 20 m). Recommended cable type: Shielded MSR cable LSYCY (2 x 0.75 mm^2); made by: Siemens

Communication with LCD trip units that have a "U" as the 9th character in the order number is only possible with COM2x RELEASE 2 or higher.

5.4.3 Applications

The function of ZSI can be used for the short-circuit between the phases (S), short-circuit to ground (G), or both simultaneously (S + G).

If a coupling switch is used in a power distribution system, it can be integrated into the ZSI concept.

5.4.4 Configuration

Data point 421 (Table 8-86) and register block 129 are available for controlling the ZSI functionality with the help of communication.

You can find more information in the Service & Support Portal (http://www.siemens.com/lowvoltage/support).

Alternatively, with LCD trip units that have a "U" as the 9th character in the order number, the setting can be made via the menu of the trip unit.

The ZSI function, that can be parameterized using a rotary coding switch, is activated at the factory.

In the case of trip units that have a menu, it is deactivated.

5.4.5 Connection

Up to 20 circuit breakers can be connected in parallel to ZSI IN, and up to 8 circuit breakers can be connected in parallel to ZSI OUT.

5.4.6 LED

If the ZSI function is activated, the Trip Unit LED on COM2x flashes green.

DEVICE
PROFIBUS
TRIP UNIT

Modbus RTU data transfer 6

6.1 Integration of the circuit breakers into a communication system

There are diverse possibilities for integrating the SENTRON circuit breakers into a communication system. A shared profile (type and content of the data transfer) for SENTRON WL and SENTRON VL also enables the use of identical programs at the automation level and the PC level.

6.2 Modbus RTU

6.2.1 Structure of the job message frame

Structure

Data traffic between the master and the slave and between the slave and the master begins with the address of the slave. The job message frame consists of the following elements:

1. Address of the MODBUS slave
2. Function code
3. Data of the message frame
4. Checksum of the message frame (CRC)

The structure of the data field depends on the function code used.

Table 6- 1 Structure of the message frame

Address	Function code	Data	CRC
Byte	Byte	n byte	2 byte

Note

- A node address of 0 is called a broadcast message frame and is processed by each node without a response.
- Address range for circuit breakers limited to 1 to 126 (126 = delivery condition)

Cyclic redundancy check (CRC)

The cyclic redundancy check checks the data flow. The CRC consists of 2 bytes:

- one LSB
- one MSB

The transmitting device calculates the CRC and appends it to the message. The receiving device calculates the CRC again and compares the newly calculated value with the received CRC. If the two values do not agree, an error has occurred.

For more details see "MODBUS organization" (http://www.modbus.org/)

End of a message frame

If no characters are transferred for the space of 3.5 bytes this is taken as the end of the message frame. A check is made to determine the validity of the message frame.

See also Function codes (Page 131)

6.2.2 Character frames

The Modbus RTU specification defines the possible character frames.

Structure of the character frame

Data is exchanged between the circuit breaker and the Modbus RTU master via the serial interface in an 11-bit character frame.
Depending on the setting of the "PARITY" communication parameter in the circuit breaker, the 1st stop bit may be replaced by the "parity bit":

8 data bits: 1 start bit, 8 data bits, 1 parity bit, 1 stop bit (“8N1“)

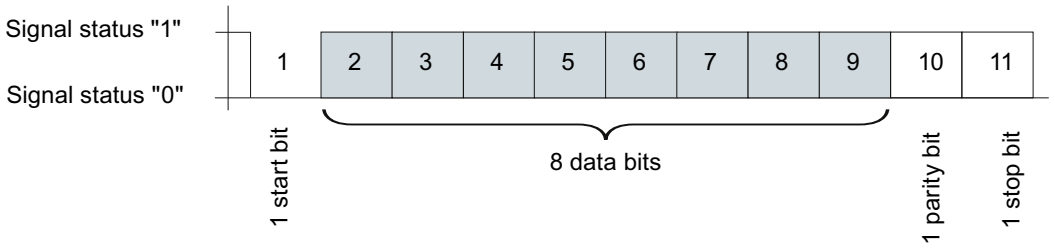

8 data bits: 1 start bit, 8 data bits, 2 stop bits (“8N2“)

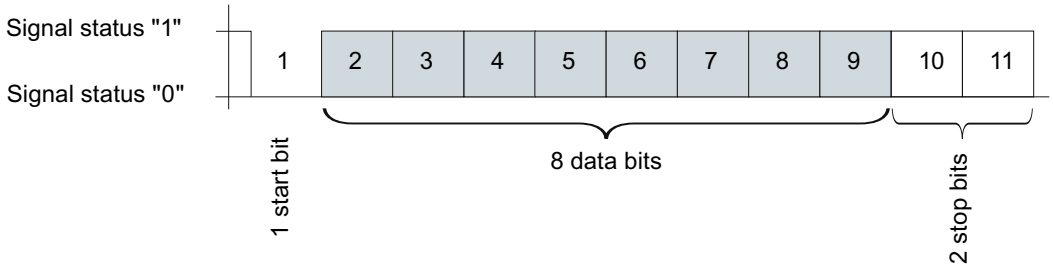

Figure 6-1 11-bit character frame

6.2.3 Communication parameter settings

In the delivery condition the circuit breaker has the following parameter settings for communication purposes:

- Address: 126
- Baud rate: 19200 bps
- Parity: None

Note

All communication modules include an "autobaud search" on startup. This allows the parameters to adapt to an existing network, so that the switch is able to be communicated with immediately.

Settings

Register			Description
Address		High/Low	
dec	hex		
40963	0xA003	HIGH	MODBUS address
40985	0xA019	LOW	"MODBUS transmission rate (baud rate)"
40985	0xA019	HIGH	Parity

For more information about formats refer to Chapter Formats (Page 243)

6.2.4 Data storage

Name of area	Function codes	Address range
Control bytes	01 (0x01) - Read output bits	0 (0x0000) - 15 (0x000F)
	05 (0x05) - Write individual output	
	15 (0x0F) - Write output block	
Status bytes	02 (0x02) - Read input	0 (0x0000) - 15 (0x000F)
Basic type data	04 (0x04) - Read basic type data	0 (0x0000) - 21 (0x0015)*
Value buffer area	03 (0x03) - Read value buffer area	0 (0x0000) - 42336 (0xA560)
	16 (0x0A) - Write value buffer area	

Area is dependent on settings (basic type)

6.2.4.1 Control bytes

These are the outputs which trigger functions of the circuit breaker.

Circuit breaker output assignment

Bit	Value	SENTRON WL	SENTRON VL
0 / 1	0..3	*Switching the circuit breaker*	
	0	Not defined (no action)	
	1	Switch off (opening of the main contacts)	
	2	Switch on (closing of the main contacts)	
	3	Not defined (no action)	
2		A currently active tripping operation is acknowledged and reset	
3		Not used	
4		Setting of the free user output	Not used
5		Not used	
6		Not used	

Bit	Value	SENTRON WL	SENTRON VL
7		Not used	
8		Not used	
9		Not used	
10		Delete tripping and event log	
11		Reset all minimum/maximum value memories (on WL, except temperature)	
12		Reset minimum/maximum value buffers for temperatures	Not available
13		Not used	
14		Reset all maintenance information and counters which can be reset	
15		Bit for synchronizing the system time to the current half hour	

6.2.4.2 Status bytes

These are the inputs which return the status of the circuit breaker.
(Included in each basic type as "binary status information").

Circuit breaker input assignment

Bit	Value	SENTRON WL	SENTRON VL
0 / 1	0..3	*Position of circuit breaker*	
	0	Disconnected position	Not available 0 is always transferred
	1	Connected position	
	2	Test position	
	3	Breaker is not available	
2 / 3	0..3	*Status of the circuit breaker*	
	0	Not ready	
	1	OFF	
	2	ON	
	3	Breaker has tripped	
4		Ready-to-close signal available	Not available
5		Undervoltage release	Not available
6		Spring energy store is compressed	Not available
7		Overload warning present	
8		An activated threshold has been exceeded	Not available
9		An alarm signal is currently present	Not available
10		Write protection disable deactivated, changes allowed	
11		Status of the free user output	—
12 /13 /14	0..7	*Reason for last tripping operation*	
	0	No tripping operation or last tripping operation acknowledged	
	1	Overload tripping (L)	
	2	Instantaneous short circuit	
	3	Short time-delayed short circuit (I)	

Bit	Value	SENTRON WL	SENTRON VL
	4	Ground fault (G)	
	5	Tripping operation as a result of extended protection function	Tripping operation as a result of extended protection function (temperature)
	6	Overload in neutral conductor	
	7		
15		Load shedding alarm	Not available

6.2.4.3 Basic type data

Due to the large volume of data provided by the SENTRON circuit breakers, there was a desire to find a compromise between data volume and performance on MODBUS. If each piece of data is retrieved individually when transferring large amounts of data, this has an adverse effect on performance capability on MODBUS.
In the interests of efficient and flexible transfer, there is therefore a choice of three basic types.
Depending on the application:

- The basic type is selected according to the volume of data.
- The data blocks included are defined by customer need, depending on the data required.

Register			Description
Address		High/Low	
dec	hex		
40964	0xA004	LOW	Basic type of MODBUS data transfer
40965	0xA005	-	Data in the cyclic profile of MODBUS

For more information about formats refer to Chapter Formats (Page 243)

Basic type 1

Byte	Definition	Default	Data point
0 / 1	Binary status information	Binary status information	
2 / 3	Data block 1	Current in phase 1	380
4 / 5	Data block 2	Current in phase 2	381
6 / 7	Data block 3	Current in phase 3	382
8 / 9	Data block 4	Max. current in phase under highest load	374
10	PB of data block 1	PB of current phase 1	
11	PB of data block 2	PB of current phase 2	
12	PB of data block 3	PB of current phase 3	
13	PB of data block 4	PB of maximum current in phase under highest load	

Basic type 2

Basic type 2 is pre-assigned for metering function.

Byte	Definition	Default	Data point
0 / 1	Binary status information	Binary status information	
2 / 3	Data block 1	Current in phase 1	380
4 / 5	Data block 2	Current in phase 2	381
6 / 7	Data block 3	Current in phase 3	382
8 / 9	Data block 4	Max. current in phase under highest load	374
10 / 11	Data block 5	Current in neutral conductor	375
12 / 13	Data block 6	Mean value of the phase-to-phase voltages	203 *
14 / 15	Data block 7	Mean value of power factors of 3 phases	168 *
16 / 17	Data block 8	Total active energy of 3 phases	238 *
18	PB of data block 1	PB of current phase 1	
19	PB of data block 2	PB of current phase 2	
20	PB of data block 3	PB of current phase 3	
21	PB of data block 4	PB of max. current in phase under highest load	
22	PB of data block 5	PB of current in neutral conductor	
23	PB of data block 6	PB of the mean value of phase-to-phase voltages	
24	PB of data block 7	PB of the mean value of the three power factors	
25	PB of data block 8	PB of total active energy	

* Alternatively, these fields can contain the default numbers of basic type 3.
If there are no changes here, the default value is nevertheless transferred.

Basic type 3

Basic type 3 consists of 14 data blocks and has input data in the 44th byte on the PLC.

Byte	Definition	Default	Data point
0 / 1	Binary status information	Binary status information	
2 / 3	Data block 1	Current in phase 1	380
4 / 5	Data block 2	Current in phase 2	381
6 / 7	Data block 3	Current in phase 3	382
8 / 9	Data block 4	Max. current in phase under highest load	374
10 / 11	Data block 5	Current in neutral conductor	375
12 / 13	Data block 6	Phase-to-phase voltage L_{12}	197
14 / 15	Data block 7	Phase-to-phase voltage L_{23}	198
16 / 17	Data block 8	Phase-to-phase voltage L_{31}	199
18 / 19	Data block 9	Neutral point voltage L_{1N}	200
20 / 21	Data block 10	Neutral point voltage L_{2N}	201
22 / 23	Data block 11	Neutral point voltage L_{3N}	202
24 / 25	Data block 12	Mean value of power factors of 3 phases	168
26 / 27	Data block 13	Total active energy of 3 phases	238
28 / 29	Data block 14	Total apparent power of 3 phases	217
30	PB of data block 1	PB of current phase 1	
31	PB of data block 2	PB of current phase 2	
32	PB of data block 3	PB of current phase 3	
33	PB of data block 4	PB of max. current in phase under highest load	
34	PB of data block 5	PB of current in neutral conductor	
35	PB of data block 6	PB of the phase-to-phase voltage L_{12}	
36	PB of data block 7	PB of the phase-to-phase voltage L_{23}	
37	PB of data block 8	PB of the phase-to-phase voltage L_{31}	
38	PB of data block 9	PB of the neutral point voltage L_{1N}	
39	PB of data block 10	PB of the neutral point voltage L_{2N}	
40	PB of data block 11	PB of the neutral point voltage L_{3N}	
41	PB of data block 12	PB of the mean value of the three power factors	
42	PB of data block 13	PB of total active energy	
43	PB of data block 14	PB of total apparent power	

6.2.4.4 Value buffer area

For more information refer to Chapter Formats (Page 243).

6.2.5 Function codes

Function codes control the data exchange. In doing so, a function code tells the node what action it is to take.

6.2.5.1 Function "01 – Read output bits"

This function reads the control bytes in the circuit breaker.

Request to node

An example of the request to read all control bytes from the circuit breaker.

Bytes	Name of byte	Description
0x07	Node address	MODBUS address 7
0x01	Function code	"01 – Read output bits"
0x00	Start address (high)	Address 0 onwards
0x00	Start address (low)	
0x00	Number of bits (high)	Read 16 bits
0x10	Number of bits (low)	
0x3D	CRC check code "low"	Check calculation value (CRC16)
0xA0	CRC check code "high"	

Response from node

The response returns the control bytes.

Bytes	Name of byte	Description
0x07	Node address	MODBUS address 7
0x01	Function code	"01 – Read output bits"
0x02	Number of bytes	2 bytes => 16 bits
0x□□	Data byte 1	Bit 0 …7
0x□□	Data byte 2	Bit 8 … 15
0x□□	CRC check code "low"	Check calculation value (CRC16)
0x□□	CRC check code "high"	

Error from node

For more information, see Summary of exception messages (Page 143).

6.2.5.2 Function "02 – Read input"

This function gets the status of the circuit breaker.

Request to node

Bytes	Name of byte	Description
0x07	Node address	MODBUS address 7
0x02	Function code	"02 – Read input"
0x00	Start address (high)	Address 0 onwards
0x00	Start address (low)	
0x00	Number of bits (high)	Read 16 bits
0x10	Number of bits (low)	
0x3D	CRC check code "low"	Check calculation value (CRC16)
0xA0	CRC check code "high"	

Response from node

Bytes	Name of byte	Description
0x07	Node address	MODBUS address 7
0x02	Function code	"02 – Read input"
0x02	Number of bytes	2 bytes => 16 bits
0x□□	Data byte 1	Bit 0 …7
0x□□	Data byte 2	Bit 8 … 15
0x□□	CRC check code "low"	Check calculation value (CRC16)
0x□□	CRC check code "high"	

Error from node

For more information, see Summary of exception messages (Page 143).

6.2.5.3 Function "03 – Read value buffer area"

This function gets values from the value buffer area of the circuit breaker.

Request to node

Bytes	Name of byte	Description
0x07	Node address	MODBUS address 7
0x03	Function code	"03 – Read value buffer area"
0x00	Start address (high)	Address 0 onwards
0x00	Start address (low)	
0x00	Number of registers (high)	Read 2 registers (4 bytes)
0x02	Number of registers (low)	
0xC4	CRC check code "low"	Check calculation value (CRC16)
0x6D	CRC check code "high"	

Response from node

Bytes	Name of byte	Description
0x07	Node address	MODBUS address 7
0x03	Function code	"03 – Read value buffer area"
0x04	Number of bytes	2 bytes => 16 bits
0x□□	Data byte 1 (high)	1stregister
0x□□	Data byte 2 (low)	
0x□□	Data byte 3 (high)	2nd register
0x□□	Data byte 4 (low)	
0x□□	CRC check code "low"	Check calculation value (CRC16)
0x□□	CRC check code "high"	

Error from node

For more information, see Summary of exception messages (Page 143).

6.2.5.4 Function "04 – Read basic type data"

The function reads all basic type data of a circuit breaker. Depending on the settings, the structure and length of the requestable data may vary.

Note

Function 04 is not supported by communication module "COM21".

Request to node

An example for reading the 22 "basic type 3" registers of a circuit breaker at MODBUS address 7.

Bytes	Name of byte	Description
0x07	Node address	MODBUS address 7
0x04	Function code	"04 – Read basic type data"
0x00	Start address (high)	Address 0 onwards
0x00	Start address (low)	
0x00	Number of registers (high)	Read 22 registers (44 bytes)
0x16	Number of registers (low)	
0x71	CRC check code "low"	Check calculation value (CRC16)
0xA2	CRC check code "high"	

Response from node

Bytes	Name of byte	Description
0x07	Node address	MODBUS address 7
0x04	Function code	"04 – Read basic type data"
0x2C	Number of bytes	44 bytes
0x□□	Data byte 1 (high)	1st register
0x□□	Data byte 2 (low)	
…	…	…
0x□□	Data byte 43 (high)	22nd register
0x□□	Data byte 44 (low)	
0x□□	CRC check code "low"	Check calculation value (CRC16)
0x□□	CRC check code "high"	

Error from node

For more information, see Summary of exception messages (Page 143).

6.2.5.5 Function "05 – Write individual output"

This function is used to write the control bytes for the circuit breaker.

Note

Command bits like the example below are edge-sensitive and must be reset each time they are used.

Request to node

This example shows how to set the bit for deleting the logbook entries in a circuit breaker with MODBUS address 7.

Bytes	Name of byte	Description
0x07	Node address	MODBUS address 7
0x05	Function code	"05 – Write individual output"
0x00	Bit address (high)	Bit 10: "Delete logbooks"
0x0A	Bit address (low)	
0xFF	Control code (high)	0xFF00 = Set bit (0x0000 = Reset bit)
0x00	Control code (low)	
0xAC	CRC check code "low"	Check calculation value (CRC16)
0x5E	CRC check code "high"	

Response from node

Bytes	Name of byte	Description
0x07	Node address	MODBUS address 7
0x05	Function code	"05 – Write individual output"
0x00	Bit address (high)	Bit 10: "Delete logbooks"
0x0A	Bit address (low)	
0xFF	Control code (high)	0xFF00 = Bit set (0x0000 = Bit not set)
0x00	Control code (low)	
0xAC	CRC check code "low"	Check calculation value (CRC16)
0x5E	CRC check code "high"	

Error from node

For more information, see Summary of exception messages (Page 143).

6.2.5.6 Function "07 – Read diagnostic information"

Note

Function 07 is not supported by communication module "COM21".

Request to node

Bytes	Name of byte	Description
0x07	Node address	MODBUS address 7
0x07	Function code	"07 – Read diagnostic information"
0x42	CRC check code "low"	Check calculation value
0x42	CRC check code "high"	(CRC16)

Bytes	Name of byte	Description
0x07	Node address	MODBUS address 7
0x07	Function code	"07 – Read diagnostic information"
0x□□	Diagnostic information byte	Refer to table
0x□□	CRC check code "low"	Check calculation value
0x□□	CRC check code "high"	(CRC16)

Diagnostic information byte

<table>
<tr><th rowspan="3">Bit</th><th colspan="3">Meaning</th></tr>
<tr><th>WL</th><th colspan="2">VL</th></tr>
<tr><th>(COM16)</th><th>(COM11)</th><th>(COM21)</th></tr>
<tr><td>0</td><td colspan="2">1 = Contact load too high</td><td rowspan="8">Function not supported
Response:
Exception message "01"</td></tr>
<tr><td>1</td><td colspan="2">1 = Communication with ETU present</td></tr>
<tr><td>2</td><td colspan="2">1 = Communication module is OK</td></tr>
<tr><td>3</td><td rowspan="4">not used,
always 0</td><td>1 = ROM test OK</td></tr>
<tr><td>4</td><td>1 = Time test OK</td></tr>
<tr><td>5</td><td>1 = RAM test OK</td></tr>
<tr><td>6</td><td>1 = Static RAM
test passed</td></tr>
<tr><td>7</td><td colspan="2">not used,
always 0</td></tr>
</table>

Error from node

For more information, see Summary of exception messages (Page 143).

6.2.5.7 Function "08 – Diagnostics"

Note

Function 08 is not supported by communication module "COM21".

This function comprises 2 subfunctions which can be used for diagnosis:

Subfunction selection

The diagnostic code defines the subfunction:

- 0x0000 Resend test data
- 0x000A Reset communication counter

(see function 12)

Resend test data

This function is used for checking communication between the master and the node.

Request to node (resend test data)

Bytes	Name of byte	Description
0x07	Node address	MODBUS address 7
0x08	Function code	"08 – Diagnostics"
0x00	Diagnostic code (high)	0x0000 = Resend test data
0x00	Diagnostic code (low)	
0xF0	Test data (high)	Test data for resend check (0xF0A5)
0xA5	Test data (low)	
0x□□	CRC check code "low"	Check calculation value (CRC16)
0x□□	CRC check code "high"	

Response from node (resend test data)

Bytes	Name of byte	Description
0x07	Node address	MODBUS address 7
0x08	Function code	"08 – Diagnostics"
0x00	Diagnostic code (high)	0x0000 = Resend test data
0x00	Diagnostic code (low)	
0xF0	Test data (high)	Test data for resend check (0xF0A5)
0xA5	Test data (low)	
0x□□	CRC check code "low"	Check calculation value (CRC16)
0x□□	CRC check code "high"	

Reset communication counter

The communication module maintains statistics, which can be read using the following functions:

- "Function 11 – Get number of messages"
- "Function 12 – Communication events"

This command resets all statistics.

Note

Test data has to be transferred with 0x0000, otherwise an exception occurs with exception code "03 – Illegal value".

Error from node

For more information, see Summary of exception messages (Page 143).

6.2.5.8 Function "11 – Get number of messages"

Function "11 – Get number of messages"

Request to node

Bytes	Name of byte	Description
0x07	Node address	MODBUS address 7
0x0B	Function code	"11 – Get number of messages"
0x□□	CRC check code "low"	Check calculation value (CRC16)
0x□□	CRC check code "high"	

Response from node

Bytes	Name of byte	Description
0x07	Node address	MODBUS address 7
0x0B	Function code	"11 – Get number of messages"
0x00	Status (high)	0x0000 = COM not busy (0xFFFF = COM still busy)
0x00	Status (low)	
0x00	Message number (high)	Number of correct messages (16)
0x10	Message number (low)	
0x□□	CRC check code "low"	Check calculation value (CRC16)
0x□□	CRC check code "high"	

Error from node

For more information, see Summary of exception messages (Page 143).

6.2.5.9 Function code "12 – Communication events"

Note

Function 12 is not supported by communication module "COM21".

Request to node

Bytes	Name of byte	Description
0x07	Node address	MODBUS address 7
0x0B	Function code	"12 – Communication events"
0x□□	CRC check code "low"	Check calculation value (CRC16)
0x□□	CRC check code "high"	

Response from node

Bytes	Name of byte	Description
0x00	Status (low)	(0xFFFF = COM still busy)
0x00	Message number OK (high)	Number of correct messages (16)
0x10	Message number OK (low)	
0x00	Message number total (high)	Number of transmitted messages (16)
0x10	Message number total (low)	
0x80	01: Message status (receipt)	FIFO - message status 1 (last message)
0x40	02: Message status (send)	
0x80	63: Message status (receipt)	FIFO - message status 32
0x40	64: Message status (send)	
0x□□	CRC check code "low"	Check calculation value (CRC16)
0x□□	CRC check code "high"	

Message status (receipt)

Bit	Description
0	Not used
1	Communication error
2	Not used
3	Not used
4	Character buffer overflow
5	Always 0, "Listen-only mode" not supported
6	Receive message to all users ("broadcast")
7	always 1

Message status (send)

Bit	Description
0	Exception for read errors (exception code 1-3)
1	Exception for node stop (exception code 4)
2	Exception for node busy (exception code 5-6)
3	Exception for node error (exception code 7)
4	Time error occurred when writing
5	Always 0, "Listen-only mode" not supported
6	always 1
7	always 0

Error from node

For more information, see Summary of exception messages (Page 143).

6.2.5.10 Function "15 – Write output block"

Writing multiple outputs in one command.

Request to node

In this example the status bytes of the circuit breaker are written:

Bytes	Name of byte	Description
0x07	Node address	MODBUS address 7
0x0F	Function code	"15 – Write output block"
0x00	Bit start address (high)	Write block from bit 0
0x00	Bit start address (low)	
0x00	Bit number (high)	Number of bits to write (16)
0x10	Bit number (low)	
0x02	Number of bytes:	Number of data bytes (1)
0x02	Data byte 1 (low) - bit 0..7	Coded bits
0xCC	Data byte 2 (high) - bit 8..15	
0x□□	CRC check code "low"	Check calculation value (CRC16)
0x□□	CRC check code "high"	
0x07	Node address	MODBUS address 7

Error from node

For more information, see Summary of exception messages (Page 143).

6.2.5.11 Function "16 – Write value buffer area"

This command can be used to write complete data areas or complex data types and transfer them to the value buffer area.

Request to node

The system time area for communication modules COM16 was chosen for this example. The command below sets the time of the circuit breaker (system time) to the following date and time:

- Wednesday. May 27, 2009, 11:15:30:000

Note

The time of communication module COM21 is located in a different area, so the command would have to be changed accordingly:

- Register start address: 0x142A

Bytes	Name of byte	Description
0x07	Node address	MODBUS address 7
0x10	Function code	"16 – Write value buffer area"
0x44	Register start address (high)	Write from system time
0x02	Register start address (low)	DS 68 (0x44); Offset 2nd register
0x00	Register number (high)	Number to be written
0x04	Register number (low)	Register (4 - system time only)
0x08	Number of bytes:	Number of data bytes (8)
0x09	Data byte 1 (low) -> year	Register 1
0x05	Data byte 2 (high) -> month	
0x27	Data byte 3 (low) -> day	Register 2
0x11	Data byte 4 (high) -> hour	
0x15	Data byte 5 (low) -> minute	Register 3
0x30	Data byte 6 (high) -> second	
0x00	Data byte 7 (low) -> . . .	Register 4
0x04	Data byte 8 (high) -> . . .	
0x□□	CRC check code "low"	Check calculation value (CRC16)
0x□□	CRC check code "high"	

Response from node

Bytes	Name of byte	Description
0x07	Node address	MODBUS address 7
0x10	Function code	"16 – Write value buffer area"
0x44	Register start address (high)	Write from system time
0x02	Register start address (low)	DS 68 (0x44); Offset 2nd register
0x00	Register number (high)	Number to be written

Bytes	Name of byte	Description
0x04	Register number (low)	Register (4 - system time only)
0x□□	CRC check code "low"	Check calculation value (CRC16)
0x□□	CRC check code "high"	

Error from node

For more information, see Summary of exception messages (Page 143).

6.2.5.12 Summary of exception messages

With the exception of broadcast message frames, the requestor expects to receive a response. There are four possible events that can occur following a request:

1. The node receives the request without communication errors and can process the request, so the normal response is sent by the node.
2. The node does not receive the request because of a communication error. The node does not send a response. The master should install a TIMEOUT for such situations.
3. The node receives an invalid request (parity or CRC). Once again no response is sent. The master should install a TIMEOUT for such situations.
4. The node receives a request which it cannot process (e.g. reading a non-existent output or value range). It responds with an exception message. The exception code in this exception message indicates the cause of the problem.

The exception message contains two fields which differ from a normal response:

- Field for function code: In a normal message the node repeats the requested function code. In an exception message the most significant bit indicates that an error has occurred (= addition of 0x80). This information enables the master to interpret the error code in the next field.
- Field for data: In a normal response the content is dependent on the function code. In exception messages only the error code is returned. This contains the reason for/status of the exception message.

Example of exception message:

Bytes	Name of byte	Description
0x07	Node address	MODBUS address 7
0x83	Function code + error code (0x80)	Error code + "03 – Read value buffer area"
0x02	Error code	02 - Illegal address
0x□□	CRC check code "low"	Check calculation value (CRC16)
0x□□	CRC check code "high"	

Error code for exception messages

Code	Name	Explanation
0x01	Illegal function	The function code received in the request is an illegal function for the node.
0x02	Illegal address	The data address received is not in a legal address range for the node.
0x03	Illegal value	A value transferred in the request is not in the legal range for the node
0x04	Node error	An unknown error occurred during processing of the request at the node.
0x05	Confirmation	The request is being processed and a certain processing time is required. This message is used to prevent a timeout error and to allow processing of the request to be completed.
0x06	Node busy	The node is still processing and the request is rejected. A new request will have to be sent when the node is not busy.

6.3 Transition to TCP/IP networks

Requirements:

- MODBUS RTU is supported

A gateway is needed here to convert the interfaces.
One possible example is the PAC4200, which is often used in parallel with circuit breakers.

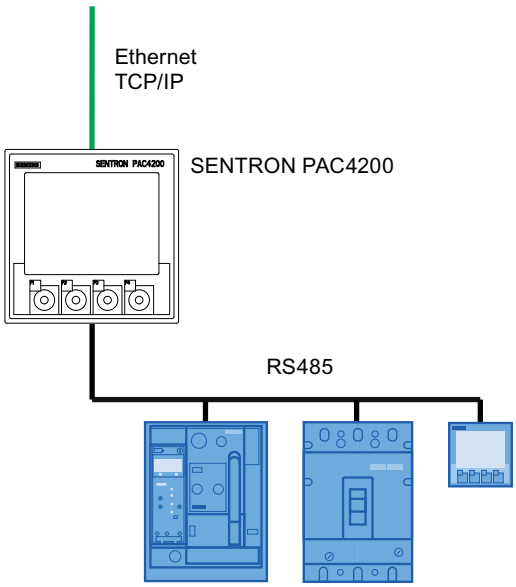

Figure 6-2 Serial gateway

For further information, refer to the relevant manuals/instructions:

SENTRON PAC4200 Power Monitoring Device System Manual:
(http://support.automation.siemens.com/WW/view/de/34261595)

powerconfig

7

Shared software platform *powerconfig* for SENTRON

The most important functions of *powerconfig* are described in this chapter.

powerconfig (from Version 2.2) is used as a shared commissioning and maintenance tool for the SENTRON VL and SENTRON WL circuit breakers with communication capability.

powerconfig offers a standardized interface and a uniform operator control concept for the activities to be carried out, such as

- Parameterizing
- Operating
- Monitoring, and
- Diagnosing.

powerconfig currently supports German and English.

7.1 Brief description

With *powerconfig* , the communication-enabled circuit breakers can be very easily parameterized at startup, monitored during operation, and meaningfully diagnosed for service purposes. There is also the option of reading out diverse statistical data (e.g. operating hours, cut-off currents, etc.) for the purpose of preventive maintenance. The user is supported here by extensive help functions and plain text displays. Extensive functions and suitable displays are available to the user for this purpose.

powerconfig communicates with the SENTRON circuit breakers via Modbus RTU.

powerconfig supports the standard Microsoft PC operating systems.

Thanks to clear display and simple operation, significant time savings are made both at the commissioning stage and during operation. Device-specific validity checks are made on the parameters entered. Faults can thus be prevented in advance. Input errors are prevented.

With *powerconfig* , the devices can be managed in a project structure.

Any device structure can be used within the project.

Example project:

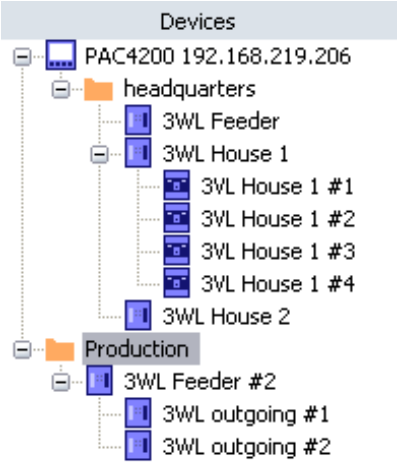

7.2 Delivery form

powerconfig is free and can be downloaded in the Siemens Service & Support Portal (http://support.automation.siemens.com/WW/view/en/50241697).

7.3 Software requirements

To be able to work with *powerconfig* , you must meet the following requirements:

Operating systems

- Microsoft Windows XP
- Microsoft Windows XP Prof. 32bit SP3. MUL OS
- Microsoft Windows 7 Professional (32bit)
- Microsoft Windows 7 Ultimate (32bit)
- Microsoft Windows 7 Home Basic (32bit)

Hardware

- RS485 interface

Required knowledge/notes

- Observe the operating instructions/manuals of the SENTRON circuit breakers
- You must be familiar with Microsoft Windows®
- Grayed-out buttons indicate that a particular function is not active or the value cannot be changed.

7.4 Online with powerconfig

For online operation, the circuit breaker must be connected with the PC/PG via Modbus RTU.

Depending on the selected *powerconfig* function, an online connection to the device is established or becomes permanent if already available (e.g. monitoring of measured variables).

7.5 Offline with powerconfig

In offline mode, device parameters can be entered, processed and stored in a project file before startup.

Parameter values are always entered in offline mode. They are exchanged between the PC/PG and the device using the transfer functions.

7.6 User interface

The user interface of *powerconfig* is clearly structured to meet your specific requirements. It consists of the familiar standard Windows functions and system-specific operator control elements.

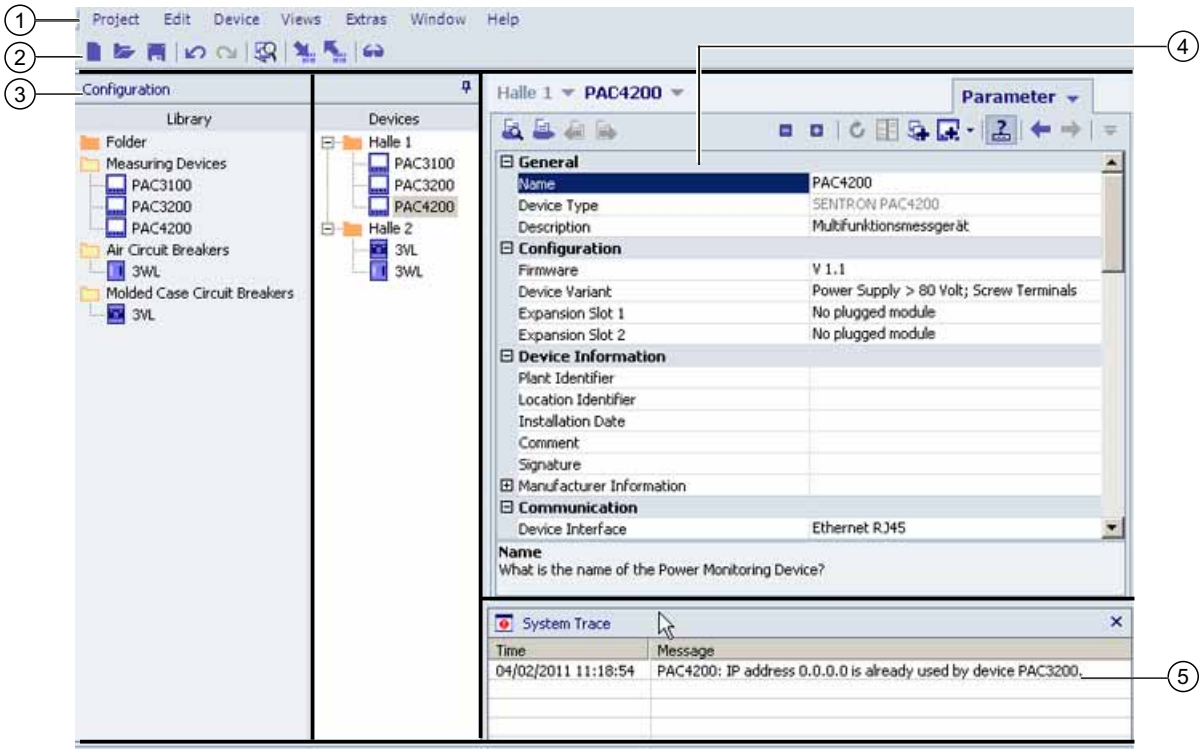

① Application frame – contains the name of the application, the title bar and the main menu. The title bar contains the name of the open project as well as the product designation. If something in the project has been modified and not yet saved, the project name is followed by the character "*"

② Button bar

③ Configuration – contains the "Library" and the "Devices" tree.

You can show and hide the "Library". To do so, select the menu "Window > Show Library".

The library contains the supported device types and the "Folder" object.

"Devices" window - The devices used in a project can be organized in a tree structure in the Devices pane. The name of a device must be unique within a project.

④ Work area - Shows the available views for a device selected in the project (e.g. the function parameters or current measured values for a PAC).

⑤ System protocol - Displays fault situations related to the project and its contents.

Figure 7-1 User interface

In general, *powerconfig* only displays those function elements or function parameters on the operator interface that are relevant to a specific device version.

7.7 "Overview" view

"Overview" view

The main overview allows the most important switch information of the SENTRON circuit breaker to be captured at a glance.

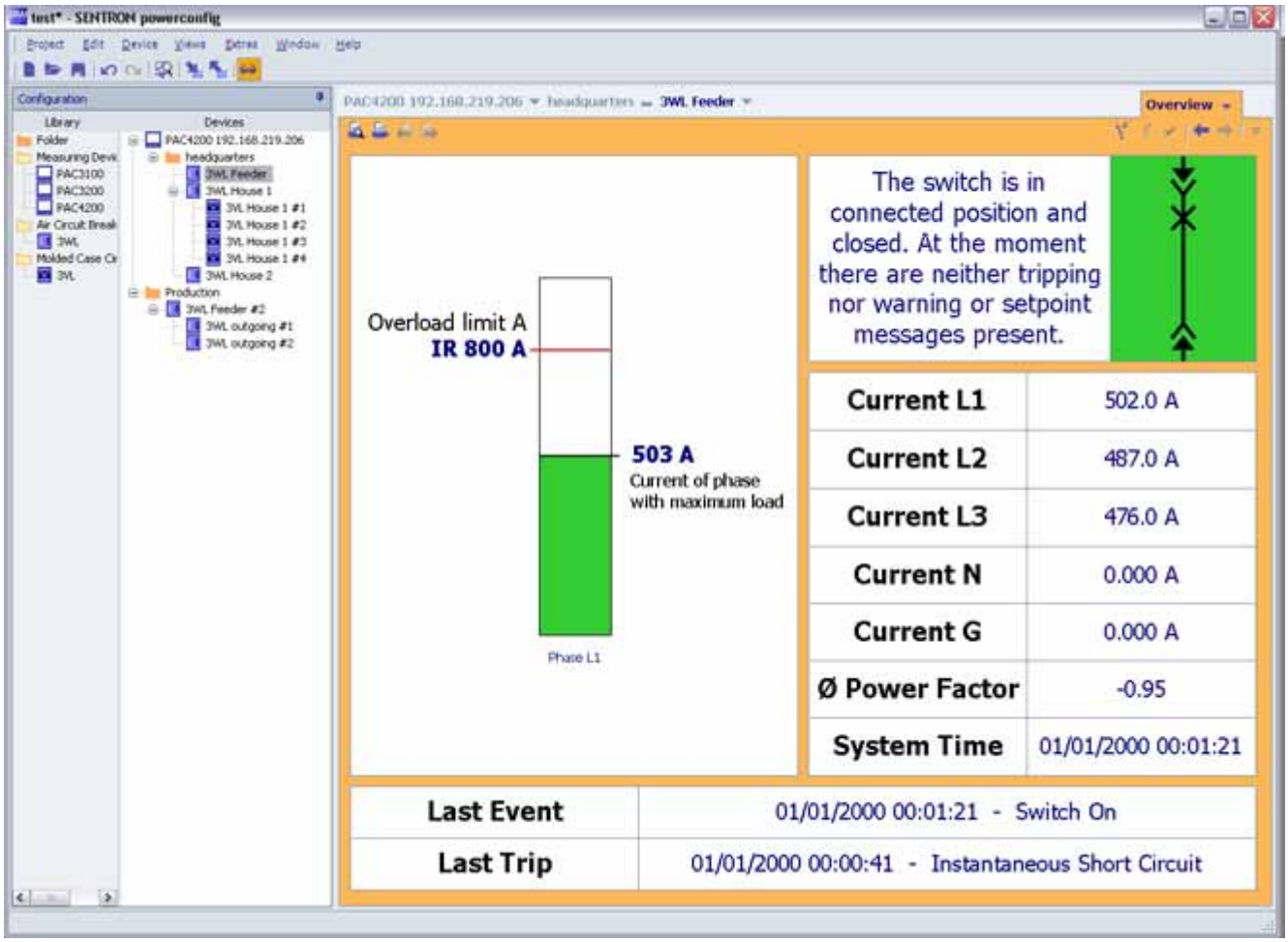

Figure 7-2 "Overview" view

The main overview shows all the important information of the circuit breaker at a glance. It is subdivided into several sections:

- Status display (breaker "On"/"Off", position in the guide frame);
  - The background color green indicates that there is no active warning, trip operation or threshold warning
  - Red means the last trip operation has not yet been acknowledged
  - Yellow means a warning or threshold warning is active.
- Current bar chart for the up-to-date current in the conductor/phase with the highest load.
- Time to tripping operation if an overload is currently active
- Current measured values and time
- Last event of the event log and last trip operation of the trip log
  - Display of the last trip operation and the last event with the corresponding time stamp.
- Using the "On"/"Off" buttons
  - Requirement: A motorized operating mechanism must be available on the breaker.

7.8 "Parameters" view

The parameter values for the devices are entered in this view.

In this view, the function settings possible for the selected device are displayed and can be modified by the user.

It is also possible to compare the devices in the project.

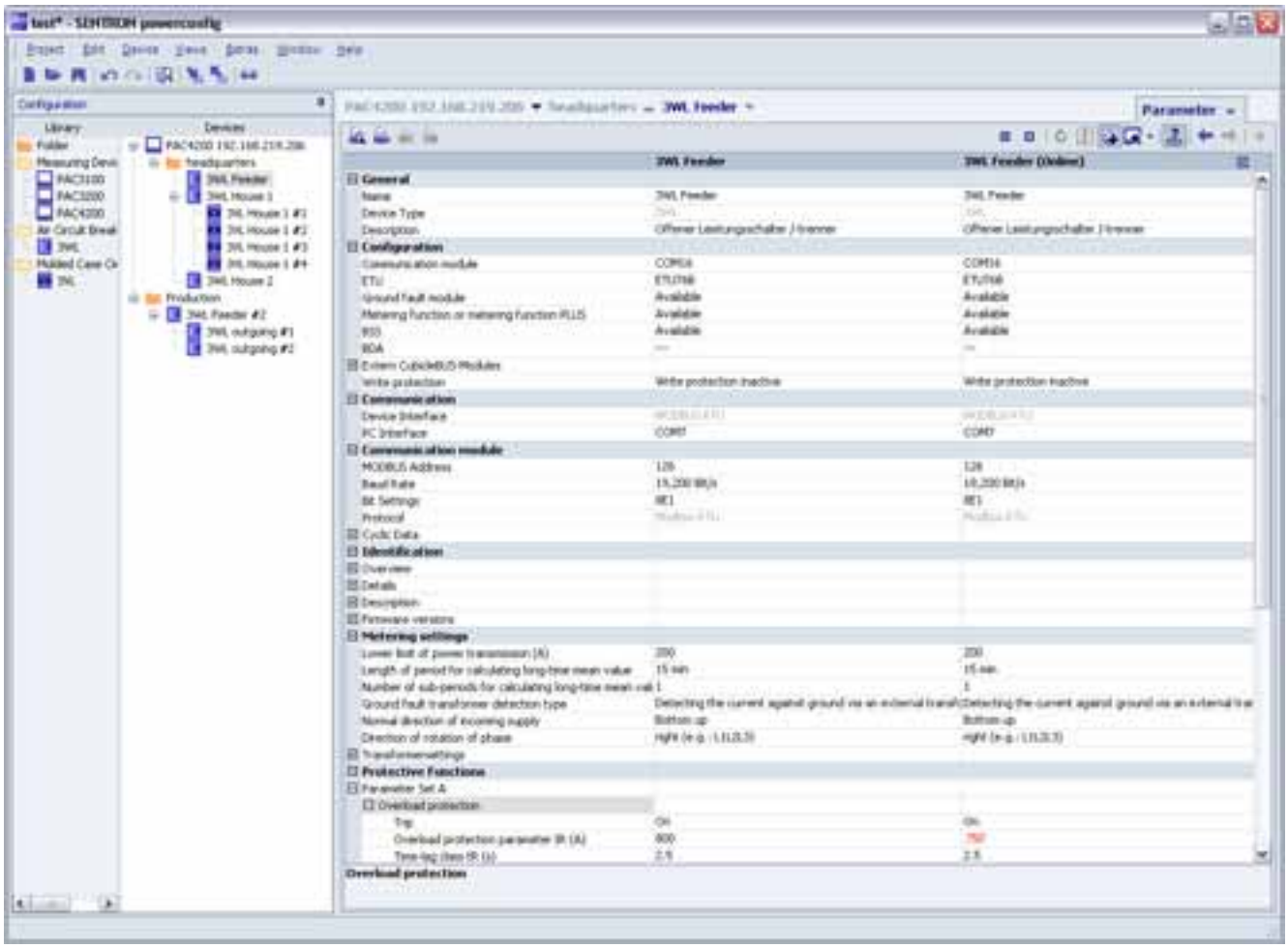

Documenting the device data

The device data (e.g. MLFB) and the set function parameters can be saved in a project and called up later. In this way, it is possible at any time (during maintenance, for example) to compare device data with the original data and detect deviations immediately. It is also possible to replace a device quickly and safely by transferring saved data.

All the views of *powerconfig* can be printed out.

The print information can be adapted flexibly to meet customer requirements.

7.9 Communication link to the circuit breakers

7.9.1 USB/RS485 adapter as point-to-point link

The point-to-point link is required for initial startup of the circuit breakers since the communication modules (3 and 5) are supplied with the standard address 126. If there are several devices with the same address (126) in one network, communication problems can result. It is therefore advisable to change the standard address by means of a point-to-point link before integrating into the network.

You can find additional information in the 3WL or 3VL chapters.

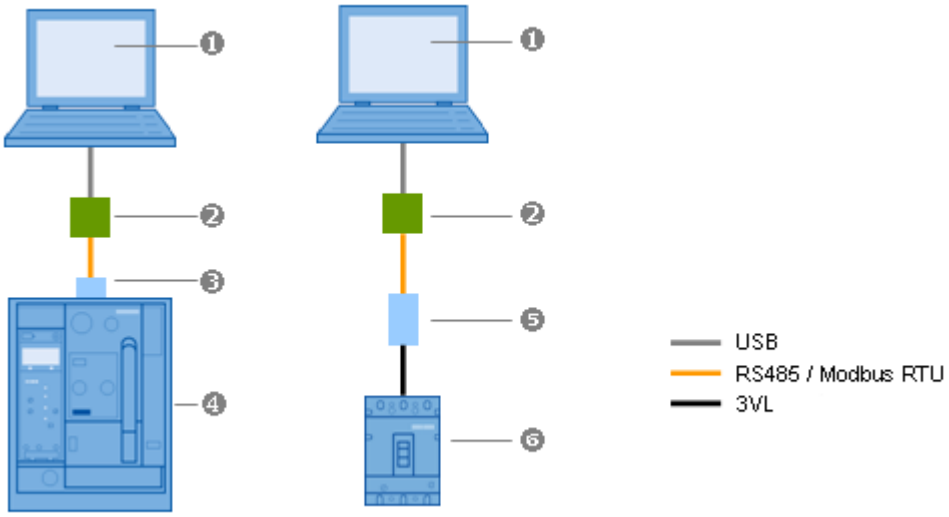

① *powerconfig* from Version 2.2
② USB/RS485 adapter
③ COM16
④ 3WL
⑤ COM21/COM11
⑥ 3VL with communication

Figure 7-3 USB/RS485 adapter as point-to-point link

7.9.2 USB/RS485 adapter

An RS485 connection is required for the communication link to the circuit breakers. This can be established via a USB/RS485 adapter ②, for example. The adapter is not included in the scope of supply of *powerconfig* .

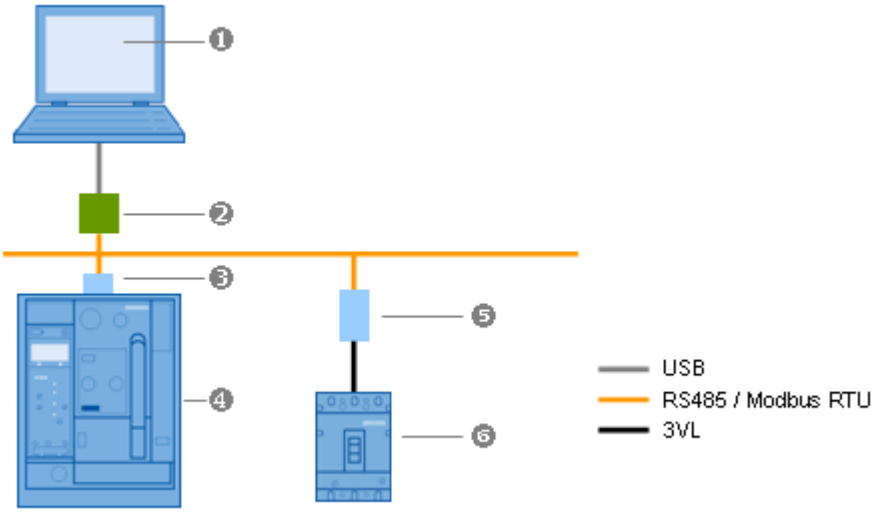

① *powerconfig* from Version 2.2
② USB/RS485 adapter
③ COM16
④ 3WL
⑤ COM21/COM11
⑥ 3VL with communication

Figure 7-4 USB/RS485 adapter

7.9.3 LAN/RS485 gateway

As well as the USB/RS485 adapter, it is also possible to use a LAN/RS485 gateway, such as the PCA4200 ②. Communication is carried out via the gateway to the devices (4, 6 or 7) in the RS485 network.

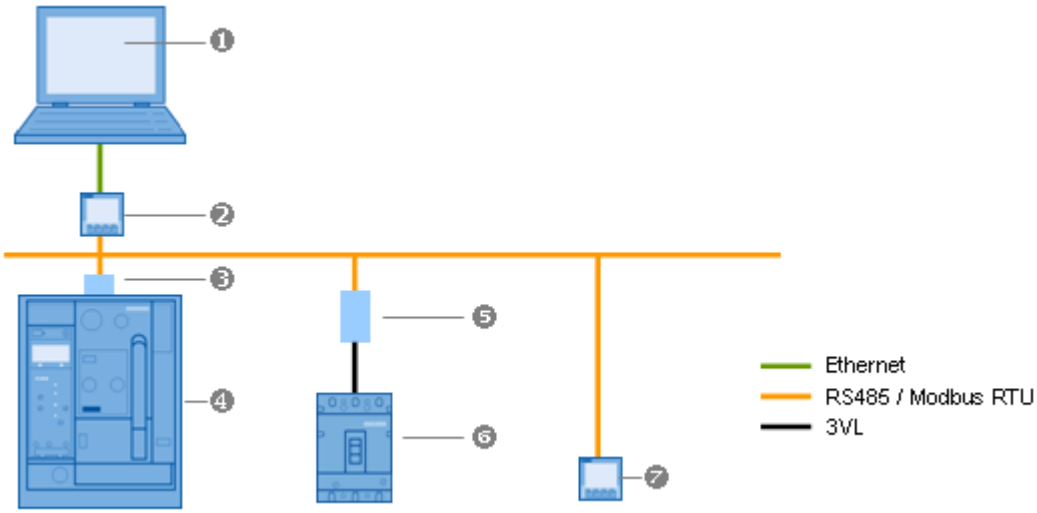

① *powerconfig* from Version 2.2
② PAC4200 as a gateway
③ COM16
④ 3WL
⑤ COM21/COM11
⑥ 3VL with communication
⑦ PAC3100

Figure 7-5 LAN/RS485 gateway

Note

If the COM modules are to be addressed with the help of *powerconfig* a point-to-point connection between the PC/PG and the communication module (COM16, COM11 or COM21) is required. It is not possible to modify addresses via a LAN/RS485 gateway connection.

Data library 8

8.1 The data library

The communication system of the SENTRON circuit breakers is extremely versatile and flexible. The majority of data points can be read, and to a certain extent written, via register blocks. Many of them can be integrated into the basic types. This chapter provides a detailed description of the different data points and their properties.

General

The basis for the shared profile of the SENTRON circuit breakers is an overall database referred to as a data library. This data library defines which circuit breaker supports which data points.

Properties of the data points

The data library also describes the properties of all data points:

- What is the data point number of this data point and what is its name?
- What is the source of this data point?
- What is the format of this data point?
- What is the size of this data point?
- What is the scaling of this data point?
- Which register address does the data point start with?
- In which register block is this data point available?

8.2 Chapter overview

This chapter describes the data points of the data library.

- In the first section, the data points are combined into function classes. Function classes are, for example, data for identification, device parameters, or measured values. This subdivision quickly enables users to find the desired data point and its properties.
- The second part of this chapter describes the structure of the read/write register blocks that in turn consist of the data points described in the previous section. This allows the register blocks transferred via Modbus RTU to be interpreted in the master.
- The third section of this chapter describes the different formats of the data points. This includes the description of the Motorola format used, e.g. "int" and "unsigned int", as well as, above all, the description of special formats. A special format is, for example, the binary breakdown of the data point that specifies the last tripping operation.

8.3 Scaling

The measured values are always transferred as integer values (format "INTEGER" = "INT") and never as Floating Point numbers (format "REAL"). These values can be signed. For this, a scaling factor must be added in the case of some measured values so that the transferred measured value can be correctly interpreted. The scaling factor to be displayed in each case can be taken from the table shown below (from "data points").

Frequency example

The measured value of the current frequency (data point #262) varies between 15.00 and 440.00 Hz. The decimal places could not be communicated using the INTEGER format without scaling. For this reason, the measured value is scaled with 10^2, and a value of between 1500 and 44000 is communicated. At the receiver end (MODBUS master), this value must now be multiplied by the scaling factor corresponding to the exponent of 10 (-2, multiplication by 10^{-2}). The exponent at the receiver end is always specified for the scaling factor.

8.4 Abbreviations of the data sources

Table 8- 1 The following abbreviations are used in the data sources:

Abbreviation	Meaning
ETU	Electronic trip unit
Meter. fct.	Metering function or metering function PLUS
DI	Digital input module
DO	Digital output module
BDA PLUS	Breaker Data Adapter PLUS
BSS	Breaker Status Sensor
conf. DO	Configurable digital output module

8.5 Units

The measured values have the following measuring units unless otherwise indicated in the tables:

Measured value	Measuring unit	Name
Current	A	Ampere
Voltage	V	Volts
Power	kW	kilowatt
Power	kVA	kilovolt ampere
Reactive power	kVA_r	kilovolt ampere (reactive)
Energy	kWh	kilowatt/hour
Reactive energy	kVArh	kilovolt ampere (reactive)/hour
Energy	MWh	megawatt/hour
Reactive energy	MVA_rh	Megavolt ampere (reactive)/hour
Temperature	°C	Degrees Celsius
THD/form factor/peak factor	%	Percent
Frequency	Hz	Hertz
Delay time	s	Seconds

This also applies to the min./max. values.

8.6 Function classes

8.6.1 Function classes of the data points

In this section, the data points are combined into function classes. Function classes are, for example, data for identification, device parameters, or measured values. This subdivision quickly enables users to find the desired data point and its properties.

8.6.2 Data points for controlling the SENTRON circuit breakers

The SENTRON circuit breakers can be controlled with the data points listed in the table below (e.g. switch on, switch off, and also functions that control the CubicleBUS modules).

Table 8- 2 Data points for controlling the circuit breaker

Description	Data point	Source WL	Contained in RB.Byte	Format	Length (bits)	Scaling
Controls the functions/commands (e.g. reset min./max. values) of the communication module	18	COM16	DS51.181	Format (18)	8	—
Controls the outputs of the communication module (e.g. switching the breaker)	19	COM16	DS93.10	Format (19)	8	—
Date of the last parameter change	84	COM16	DS51.182	Time	64	—
System time of the circuit breaker	90	COM16	DS93.11	Time	64	—
Controls the digital output module 1	121	DO1	DS91.10	Format (121)	8	—
Controls the digital output module 2	126	DO2	DS51.194	Format (121)	8	—
Controls the trip unit	406	ETU	DS68.4 DS52.44*	Format (406)	16	—
6 Modbus RTU bits for the digital configurable output module	426	COM16	DS93.8	Format (426)	6	—

* COM21 only

8.6.3 Data points for detailed diagnostics of the SENTRON circuit breakers

The SENTRON circuit breakers provide a host of data for detailed diagnostics shown in the table below:

Table 8- 3 Data points for detailed diagnostics of the SENTRON circuit breakers

Description	Data point	Source WL	Contained in RB.Byte	Format	Length (bits)	Scaling
Write protection (DPWriteEnable)	14	COM16	DS69.11	Format (14)	1	—
Trip log of the last 5 tripping operations with time	15	COM16	DS51.0	Format (15)	480	—
Event log of the last 10 events with time	16	COM16	DS51.60	Format (16)	960	—
Number of switching operations under load	80	COM16	DS92.42	unsigned int	16	0
Number of switching operations caused by trips	81	COM16	DS91.0	unsigned int	16	0
Switching cycle counter (for switching cycle on/off)	82	COM16	DS91.2	unsigned int	16	0
Runtime meter (when On + current > 0)	83	COM16	DS91.4	unsigned long	32	0
Number of short-circuit trips (SI)	104	ETU	DS91.6	unsigned int	16	0
Number of overload trips (L)	105	ETU	DS91.18	unsigned int	16	0

Description	Data point	Source WL	Contained in RB.Byte	Format	Length (bits)	Scaling
Number of ground-fault tripping operations (G)	106	ETU	DS91.20	unsigned int	16	0
Total of deactivated I²t values L1, L2, L3, N	107	ETU	DS91.22	Format (107)	128	0
Tripping operations by metering function PLUS	307	Meter. fct. PLUS	DS91.24	Format (307)	16	—
Threshold warnings	308	Meter. fct. PLUS	DS92.28	Format (308)	32	—
Harmonics of current/voltage to the 29th	309	Meter. fct. PLUS	DS92.30	Format (309)	928	0
Order number of the trip unit	371	ETU	DS64.0	18 x char	144	—
Time until presumed overload trip	379	ETU	DS97.126	unsigned int	16	0
Last unacknowledged tripping operation of the trip unit	401	ETU	DS51.1	Format (401)	8	—
Currently pending alarms	402	ETU	DS92.26	Format (402)	16	—
Current at the moment of shutdown	403	ETU	DS92.24	unsigned int	16	0(VL)/1
Phase at the moment of shutdown	404	ETU	DS92.34	Format (373)	3	—
Switch position at the digital input module 1	111	DI1	DS92.36	Format (111)	8	—
Switch position at the digital input module 2	115	DI2	DS69.3	Format (111)	8	—
Switch position at the digital output module 1	119	DO1	DS69.4	Format (119)	8	—
Switch position at the digital output module 2	124	DO2	DS69.5	Format (119)	8	—
Shows the phase with maximum load	373	ETU	DS69.6	Format (373)	3	—
Position and status of the circuit breaker in the frame	24	COM16	DS51.183	Format (24)	4	—
Modules connected to the CubicleBUS	88	COM16	DS52.24*	Format (88)	32	—
Status of the inputs of the digital input module 1	110	DI1	DS51.202	Hex	8	—
Status of the inputs of the digital input module 2	114	DI2	DS92.37	Hex	8	—
Status of outputs of the digital output module 1	118	DO1	DS52.25*	Hex	8	—
Status of outputs of the digital output module 2	123	DO2	DS92.20	Hex	8	—
Status of the connected MODBUS	17	COM16	DS91.48	Format (17)	3	—
Status of the circuit breaker (on/off/powered, etc.)	328	BSS	DS69.0	Format (328)	8	—
Maintenance information about the main contacts	405	ETU	DS69.1	Format (405)	2	—

* COM21 only

8.6.4 Data points for identifying the SENTRON circuit breakers

The SENTRON circuit breakers provide a host of data for detailed diagnostics shown in the table below:

Table 8- 4 Data points for identifying the SENTRON circuit breakers

Description	Data point	Source WL	Source VL [1]	Source VL [2]	Format	Length (bits)	Scaling	Contained in DS.Byte
User text (freely editable)	20	COM16	—	COM21	64 x char	512	—	DS165.4
Plant identifier (freely editable)	21	COM16	—	—	64 x char	512	—	DS165.68
Date (freely editable)	22	COM16	—	—	Time	64	—	DS165.132
Author (freely editable)	23	COM16	—	—	30 x char	240	—	DS165.140
Identification number of COM	91	COM16	COM11	COM21	16 x char	128	—	DS162.4
Market in which the trip unit is used	95	ETU	—	COM21	Format (95)	2	—	DS97.47
Identification number of circuit breaker	96	ETU	—	—	20 x char	160	—	DS97.48
Test date of switch	98	ETU	—	—	Time	64	—	DS97.74 DS100.4
Switching capacity class	99	ETU	—	—	Format (99)	4	—	DS97.82
Size	100	ETU	—	—	Format (100)	2	—	DS97.83
Rated voltage (LL) of the circuit breaker	101	ETU	—	—	unsigned int	16	0	DS97.84
Rated current of the external g transformer	102	ETU	—	—	unsigned int	16	0	DS97.86 DS129.70
Order number of the circuit breaker (on the SENTRON VL, this is the order number of the trip unit)	103	ETU	ETU	—	Format (103)	160	—	DS162.20 DS97.88
Number of poles of circuit breaker	108	ETU	ETU	ETU	Format (108)	3	—	DS97.144
Type (metering function, metering function PLUS)	138	Meter. fct.	—	—	Format (138)	8	—	DS162.40
Rating plug	377	ETU	ETU	ETU	unsigned int	16	0	DS51.208 DS97.146
Circuit breaker frame	378	ETU	ETU	ETU	unsigned int	16	0	DS97.148
Order number of the trip unit	407	ETU	ETU	—	16 x char	144	—	DS97.0
Date of manufacture of trip unit	408	ETU	—	—	Time	64	—	DS97.18
Identification number of trip unit	409	ETU	ETU	—	17 x char	136	—	DS97.26
N transformer connected	411	ETU	ETU	ETU	Format (411)	1	—	DS97.45
Type of trip unit	412	ETU	ETU	ETU	Format (412)	5	—	DS162.41

Description	Data point	Source WL	Source VL [1]	Source VL [2]	Format	Length (bits)	Scaling	Contained in DS.Byte
Order number COM11	424	—	COM11	—	16 x char	128	—	DS97.154
Serial number COM11/COM21	425	—	COM11	COM21	16 x char	128	—	DS97.170

[1] LCD ETU with COM11

[2] communication-capable ETU with COM21

8.6.5 Data points for measured values current

The table below contains the data points for measured values current:

Table 8- 5 Data points for measured values current

Description	Data point	Source WL	Source VL [1]	Source VL [2]	Format	Length (bits)	Scaling	Contained in DS.Byte
Phase unbalance current (as %)	172	Meter. fct.	ETU	ETU	unsigned c har	8	0	DS94.0
Long-time mean value of 3-phase current	193	Meter. fct.	ETU	ETU	unsigned int	16	0	DS94.2
Long-time mean value of current L1	194	Meter. fct.	ETU	—	unsigned int	16	0	DS94.4
Long-time mean value of current L2	195	Meter. fct.	ETU	—	unsigned int	16	0	DS94.6
Long-time mean value of current L3	196	Meter. fct.	ETU	—	unsigned int	16	0	DS94.8
Minimum long-time mean value for current	244	Meter. fct.	—	—	unsigned int	16	0	DS72.24
Maximum long-time mean value for current	245	Meter. fct.	—	COM21	unsigned int	16	0	DS72.26
Current of phase with maximum load	374	ETU	ETU	ETU	unsigned int	16	0	DS51.186 DS52.6*
Current in neutral conductor	375	ETU	ETU	ETU	unsigned int	16	0	DS51.190 DS94.18 DS52.8*
Current which flows to ground	376	ETU	ETU	ETU	unsigned int	16	0	DS51.192 DS94.20 DS52.10*
Current in phase 1	380	ETU	ETU	ETU	unsigned int	16	0	DS94.10
Current in phase 2	381	ETU	ETU	ETU	unsigned int	16	0	DS94.12
Current in phase 3	382	ETU	ETU	ETU	unsigned int	16	0	DS94.14
Mean current value over the three phases	383	ETU	ETU	ETU	unsigned int	16	0	DS94.16
Minimum current in phase 1	384	ETU	ETU	—	unsigned int	16	0	DS72.0
Maximum current in phase 1	385	ETU	ETU	—	unsigned int	16	0	DS72.2
Minimum current in phase 2	386	ETU	ETU	—	unsigned int	16	0	DS72.4
Maximum current in phase 2	387	ETU	ETU	—	unsigned int	16	0	DS72.6
Minimum current in phase 3	388	ETU	ETU	—	unsigned int	16	0	DS72.8
Maximum current in phase 3	389	ETU	ETU	—	unsigned int	16	0	DS72.10

Description	Data point	Source WL	Source VL [1]	Source VL [2]	Format	Length (bits)	Scaling	Contained in DS.Byte
Minimum current in neutral conductor	390	ETU	ETU	—	unsigned int	16	0	DS72.12
Maximum current in neutral conductor	391	ETU	ETU	ETU	unsigned int	16	0	DS72.14
Minimum current which flows to ground	392	ETU	ETU	—	unsigned int	16	0	DS72.16
Maximum current which flows to ground	393	ETU	ETU	ETU	unsigned int	16	0	DS72.18
Minimum mean value over the three phases	394	ETU	ETU	—	unsigned int	16	0	DS72.20
Maximum mean value over the three phases	395	ETU	ETU	ETU	unsigned int	16	0	DS72.22

* COM21 only

[1] LCD ETU with COM11

[2] communication-capable ETU with COM21

8.6.6 Data points for measured values voltage

The table below contains the data points for measured values voltage:

Table 8- 6 Data points for measured values voltage

Description	Data point	Source WL	Source VL [1]	Source VL [2]	Format	Length (bits)	Scaling	Contained in DS.Byte
Phase unbalance voltage (in %)	173	Meter. fct.	—	—	unsigned char	8	0	DS94.22
Phase-to-phase voltage between phase L1 and L2	197	Meter. fct.	—	—	unsigned int	16	0	DS94.24
Phase-to-phase voltage between phase L2 and L3	198	Meter. fct.	—	—	unsigned int	16	0	DS94.26
Phase-to-phase voltage between phase L3 and L1	199	Meter. fct.	—	—	unsigned int	16	0	DS94.28
Neutral point voltage phase L1	200	Meter. fct.	—	—	unsigned int	16	0	DS94.30
Neutral point voltage phase L2	201	Meter. fct.	—	—	unsigned int	16	0	DS94.32
Neutral point voltage phase L3	202	Meter. fct.	—	—	unsigned int	16	0	DS94.34
Mean value of phase-to-phase voltage	203	Meter. fct.	—	—	unsigned int	16	0	DS94.36
Mean value of neutral-point star voltage	204	Meter. fct.	—	—	unsigned int	16	0	DS94.38
Minimum phase-to-phase voltage between phase L1 and L2	205	Meter. fct.	—	—	unsigned int	16	0	DS73.0
Maximum phase-to-phase voltage between phase L1 and L2	206	Meter. fct.	—	—	unsigned int	16	0	DS73.2
Minimum phase-to-phase voltage between phase L2 and L3	207	Meter. fct.	—	—	unsigned int	16	0	DS73.4
Maximum phase-to-phase voltage between phase L2 and L3	208	Meter. fct.	—	—	unsigned int	16	0	DS73.6
Minimum phase-to-phase voltage between phase L3 and L1	209	Meter. fct.	—	—	unsigned int	16	0	DS73.8
Maximum phase-to-phase voltage between phase L3 and L1	210	Meter. fct.	—	—	unsigned int	16	0	DS73.10
Minimum of the neutral point voltage phase L1	211	Meter. fct.	—	—	unsigned int	16	0	DS73.12
Maximum of the neutral point voltage phase L1	212	Meter. fct.	—	—	unsigned int	16	0	DS73.14
Minimum of the neutral point voltage phase L2	213	Meter. fct.	—	—	unsigned int	16	0	DS73.16
Maximum of the neutral point voltage phase L2	214	Meter. fct.	—	—	unsigned int	16	0	DS73.18

Description	Data point	Source WL	Source VL [1]	Source VL [2]	Format	Length (bits)	Scaling	Contained in DS.Byte
Minimum of the neutral point voltage phase L3	215	Meter. fct.	—	—	unsigned int	16	0	DS73.20
Maximum of the neutral point voltage phase L3	216	Meter. fct.	—	—	unsigned int	16	0	DS73.22

1 LCD ETU with COM11

2 communication-capable ETU with COM21

8.6.7 Data points for measured values power

The table below contains the data points for measured values power:

Table 8- 7 Data points for measured values power

Description	Data point	Source WL	Source VL [1]	Source VL [2]	Format	Length (bits)	Scaling	Contained in DS.Byte
Total apparent power	217	Meter. fct.	—	—	unsigned int	16	0	DS94.40
Apparent power in phase L1	218	Meter. fct.	—	—	unsigned int	16	0	DS94.62
Apparent power in phase L2	219	Meter. fct.	—	—	unsigned int	16	0	DS94.64
Apparent power in phase L3	220	Meter. fct.	—	—	unsigned int	16	0	DS94.66
Total active power	221	Meter. fct.	—	—	signed int	16	0	DS94.42
Active power in phase L1	222	Meter. fct.	—	—	signed int	16	0	DS94.44
Active power in phase L2	223	Meter. fct.	—	—	signed int	16	0	DS94.46
Active power in phase L3	224	Meter. fct.	—	—	signed int	16	0	DS94.48
Total reactive power	225	Meter. fct.	—	—	signed int	16	0	DS94.50
Reactive power in phase L1	226	Meter. fct.	—	—	signed int	16	0	DS94.76
Reactive power in phase L2	227	Meter. fct.	—	—	signed int	16	0	DS94.78
Reactive power in phase L3	228	Meter. fct.	—	—	signed int	16	0	DS94.80
Long-time mean value of 3-phase active power	229	Meter. fct.	—	—	signed int	16	0	DS94.52
Long-time mean value of active power in phase L1	230	Meter. fct.	—	—	signed int	16	0	DS94.54
Long-time mean value of active power in phase L2	231	Meter. fct.	—	—	signed int	16	0	DS94.56
Long-time mean value of active power in phase L3	232	Meter. fct.	—	—	signed int	16	0	DS94.58
Long-time mean value of 3-phase apparent power	233	Meter. fct.	—	—	unsigned int	16	0	DS94.60
Long-time mean value of apparent power in phase L1	234	Meter. fct.	—	—	unsigned int	16	0	DS94.68
Long-time mean value of apparent power in phase L2	235	Meter. fct.	—	—	unsigned int	16	0	DS94.70
Long-time mean value of apparent power in phase L3	236	Meter. fct.	—	—	unsigned int	16	0	DS94.72

Description	Data point	Source WL	Source VL [1]	Source VL [2]	Format	Length (bits)	Scaling	Contained in DS.Byte
Long-time mean value of 3-phase reactive power	237	Meter. fct.	—	—	signed int	16	0	DS94.74
Minimum of the mean value of the apparent power	246	Meter. fct.	—	—	unsigned int	16	0	DS74.4
Maximum of the mean value of the apparent power	247	Meter. fct.	—	—	unsigned int	16	0	DS74.6
Minimum of the mean value of the reactive power	248	Meter. fct.	—	—	signed int	16	0	DS74.12
Maximum of the mean value of the reactive power	249	Meter. fct.	—	—	signed int	16	0	DS74.14
Minimum of the mean value of the active power	250	Meter. fct.	—	—	signed int	16	0	DS74.8
Maximum of the mean value of the active power	251	Meter. fct.	—	—	signed int	16	0	DS74.10

[1] LCD ETU with COM11

[2] communication-capable ETU with COM21

8.6.8 Data points for other measured values

The table below contains the data points for other measured values :

Table 8- 8 Data points for other measured values

Description	Data point	Source WL	Source VL [1]	Source VL [2]	Format	Length (bits)	Scaling	Contained in DS.Byte
Mean value of the power factor	168	Meter. fct.	—	—	signed int	16	- 3	DS51.184 DS94.98
Power factor in phase L1	169	Meter. fct.	—	—	signed int	16	- 3	DS94.100
Power factor in phase L2	170	Meter. fct.	—	—	signed int	16	- 3	DS94.102
Power factor in phase L3	171	Meter. fct.	—	—	signed int	16	- 3	DS94.104
Minimum of the mean value of the power factor	242	Meter. fct.	—	—	signed int	16	- 3	DS74.0
Maximum of the mean value of the power factor	243	Meter. fct.	—	—	signed int	16	- 3	DS74.2
Temperature in the control cabinet (acc. in COM16)	71	COM16	—	—	unsigned char	8	0	DS94.114
Minimum temperature in the control cabinet	72	COM16	—	—	unsigned char	8	0	DS77.0
Maximum temperature in the control cabinet	73	COM16	—	—	unsigned char	8	0	DS77.1
Temperature in circuit breaker (acc. in BSS)	330	BSS	—	—	unsigned char	8	0	DS94.115
Minimum temperature in the circuit breaker	74	COM16	—	—	unsigned char	8	0	DS77.2
Maximum temperature in the circuit breaker	75	COM16	—	—	unsigned char	8	0	DS77.3
Active energy in normal direction [MWh]	238	Meter. fct.	—	—	unsigned long	32	0	DS94.82
Active energy in normal direction [kWh]	433	Meter. fct.	—	—	unsigned long	32	0	DS94.116
Active energy in reverse direction [MWh]	239	Meter. fct.	—	—	unsigned long	32	0	DS94.86
Active energy in reverse direction [kWh]	434	Meter. fct.	—	—	unsigned long	32	0	DS94.120
Reactive energy in normal direction [MVarh]	240	Meter. fct.	—	—	unsigned long	32	0	DS94.90
Reactive energy in normal direction [kVarh]	435	Meter. fct.	—	—	unsigned long	32	0	DS94.124
Reactive energy in reverse direction [MVarh]	241	Meter. fct.	—	—	unsigned long	32	0	DS94.94
Reactive energy in reverse direction [kVarh]	436	Meter. fct.	—	—	unsigned long	32	0	DS94.128
Frequency 3VL	396	—	ETU	—	unsigned int	16	- 2	DS94.112

Description	Data point	Source WL	Source VL [1]	Source VL [2]	Format	Length (bits)	Scaling	Contained in DS.Byte
Frequency	262	Meter. fct.	—	—	unsigned int	16	- 2	DS94.106
Minimum frequency	252	Meter. fct.	—	—	unsigned int	16	- 2	DS76.2
Maximum frequency	253	Meter. fct.	—	—	unsigned int	16	- 2	DS76.0
THD of current	254	Meter. fct.	—	—	unsigned char	8	0	DS94.108
Minimum THD of current	255	Meter. fct.	—	—	unsigned char	8	0	DS76.4
Maximum THD of current	256	Meter. fct.	—	—	unsigned char	8	0	DS76.5
THD of voltage	257	Meter. fct.	—	—	unsigned char	8	0	DS94.109
Minimum THD of voltage	258	Meter. fct.	—	—	unsigned char	8	0	DS76.6
Maximum THD of voltage	259	Meter. fct.	—	—	unsigned char	8	0	DS76.7
Peak factor	260	Meter. fct.	—	—	unsigned char	8	- 1	DS94.111
Minimum peak factor	263	Meter. fct.	—	—	unsigned char	8	- 1	DS72.28
Maximum peak factor	264	Meter. fct.	—	—	unsigned char	8	- 1	DS72.29
Form factor	261	Meter. fct.	—	—	unsigned char	8	- 1	DS94.110
Minimum form factor	265	Meter. fct.	—	—	unsigned char	8	- 1	DS72.30

[1] LCD ETU with COM11

[2] communication-capable ETU with COM21

8.6.9 Data points for the time stamp (TS) of the measured values

The table below contains the data points for the time stamp (TS) of the measured values:

Table 8- 9 Data points for the time stamp (TS) of the measured values

Description	Data point	Source WL	Source VL [1]	Source VL [2]	Format	Length (bits)	Scaling	Contained in DS.Byte
TS minimum current in phase L1	25	COM16	COM11	—	Time	64	—	DS72.32
TS maximum current in phase L1	26	COM16	COM11	—	Time	64	—	DS72.40
TS minimum current in phase L2	27	COM16	COM11	—	Time	64	—	DS72.48
TS maximum current in phase L2	28	COM16	COM11	—	Time	64	—	DS72.56
TS minimum current in phase L3	29	COM16	COM11	—	Time	64	—	DS72.64
TS maximum current in phase L3	30	COM16	COM11	—	Time	64	—	DS72.72
TS minimum current in neutral conductor	33	COM16	COM11	—	Time	64	—	DS72.112
TS maximum current in neutral conductor	34	COM16	COM11	—	Time	64	—	DS72.120
TS minimum current that flows to ground	35	COM16	COM11	—	Time	64	—	DS72.128
TS maximum current that flows to ground	36	COM16	COM11	—	Time	64	—	DS72.136
TS minimum mean value over the three phases	31	COM16	COM11	—	Time	64	—	DS72.80
TS maximum mean value over the three phases	32	COM16	COM11	—	Time	64	—	DS72.88
TS minimum long-time mean value for current	55	COM16	—	—	Time	64	—	DS72.96
TS maximum long-time mean value of current	56	COM16	—	—	Time	64	—	DS72.104
TS minimum phase-to-phase voltage between phase L1 and L2	37	COM16	—	—	Time	64	—	DS73.24
TS maximum phase-to-phase voltage between phase L1 and L2	38	COM16	—	—	Time	64	—	DS73.32
TS minimum phase-to-phase voltage between phase L2 and L3	39	COM16	—	—	Time	64	—	DS73.40
TS maximum phase-to-phase voltage between phase L2 and L3	40	COM16	—	—	Time	64	—	DS73.48
TS minimum phase-to-phase voltage between phase L3 and L1	41	COM16	—	—	Time	64	—	DS73.56
TS maximum phase-to-phase voltage between phase L3 and L1	42	COM16	—	—	Time	64	—	DS73.64
TS minimum of the neutral point voltage phase L1	43	COM16	—	—	Time	64	—	DS73.72
TS maximum of the neutral point voltage phase L1	44	COM16	—	—	Time	64	—	DS73.80
TS minimum of the neutral point voltage phase L2	45	COM16	—	—	Time	64	—	DS73.88

Description	Data point	Source WL	Source VL [1]	Source VL [2]	Format	Length (bits)	Scaling	Contained in DS.Byte
TS maximum of the neutral point voltage phase L2	46	COM16	—	—	Time	64	—	DS73.96
TS minimum of the neutral point voltage phase L3	47	COM16	—	—	Time	64	—	DS73.104
TS maximum of the neutral point voltage phase L3	48	COM16	—	—	Time	64	—	DS73.112
TS minimum of the mean value of the apparent power	57	COM16	—	—	Time	64	—	DS74.16
TS maximum of the mean value of the apparent power	58	COM16	—	—	Time	64	—	DS74.24
TS minimum of the mean value of the active power	49	COM16	—	—	Time	64	—	DS74.32
TS maximum of the mean value of the active power	50	COM16	—	—	Time	64	—	DS74.40
TS minimum of the mean value of the reactive power	51	COM16	—	—	Time	64	—	DS74.48
TS maximum of the mean value of the reactive power	52	COM16	—	—	Time	64	—	DS74.56
TS minimum of the mean value of the power factor	53	COM16	—	—	Time	64	—	DS74.64
TS maximum of the mean value of the power factor	54	COM16	—	—	Time	64	—	DS74.72
TS minimum temperature in the control cabinet	76	COM16	—	—	Time	64	—	DS77.4
TS maximum temperature in the control cabinet	77	COM16	—	—	Time	64	—	DS77.12
TS minimum temperature in the circuit breaker	78	COM16	—	—	Time	64	—	DS77.20
TS maximum temperature in the circuit breaker	79	COM16	—	—	Time	64	—	DS77.28
TS minimum frequency	59	COM16	—	—	Time	64	—	DS76.8
TS maximum frequency	60	COM16	—	—	Time	64	—	DS76.16
TS minimum THD of current	61	COM16	—	—	Time	64	—	DS76.24
TS maximum THD of current	62	COM16	—	—	Time	64	—	DS76.32
TS minimum THD of voltage	63	COM16	—	—	Time	64	—	DS76.40
TS maximum THD of voltage	64	COM16	—	—	Time	64	—	DS76.48
TS minimum peak factor	65	COM16	—	—	Time	64	—	DS72.144
TS maximum peak factor	66	COM16	—	—	Time	64	—	DS72.152
TS minimum form factor	67	COM16	—	—	Time	64	—	DS72.160
TS maximum form factor	68	COM16	—	—	Time	64	—	DS72.168

[1] LCD ETU with COM11

[2] communication-capable ETU with COM21

8.6.10 Parameters of the SENTRON circuit breakers (primary protection function)

The table below contains the parameters of the SENTRON circuit breakers (primary protection function):

Table 8- 10 Parameters of the SENTRON circuit breakers (primary protection function)

Description	Data point	Source WL	Source VL [1]	Source VL [2]	Format	Length (bits)	Scaling	Contained in DS.Byte
Active parameter set	370	ETU	—	ETU	Format (370)	1	—	DS129.65
Time lag class (SENTRON VL LCD ETU40M only)	331	—	ETU	ETU	Format (331)	8	0	DS129.68
Overload parameter I_R parameter set A (PS A)	333	ETU	ETU	ETU	unsigned int	16	0	DS129.4
Time-lag class t_R PS A	335	ETU	ETU	ETU	unsigned int	16	– 1	DS129.8
Short-circuit protection instantaneous I_i PS A	336	ETU	ETU	ETU	unsigned int	16	1 / 0 (VL)	DS129.10
Short-circuit protection delayed I_{sd} PS A	337	ETU	ETU	ETU	unsigned int	16	1 / 0 (VL)	DS129.12
Delay time for short-circuit protection t_{sd} PS A	338	ETU	ETU	ETU	unsigned int	16	–3	DS129.14
Overload protection neutral conductor I_N PS A (WL)	334	ETU	—	—	unsigned int	16	0	DS129.6
Overload protection neutral conductor I_N (VL)	365	—	ETU	ETU	unsigned char	8	0	DS129.66
Ground-fault protection I_g PS A	339	ETU	ETU	ETU	unsigned int	16	0	DS129.16
Delay time for ground-fault protection t_g PS A	340	ETU	ETU	ETU	unsigned int	16	– 3	DS129.18
Ground fault alarm I_{g2} PS A	341	ETU	ETU	—	unsigned int	16	0	DS129.20
Delay time for ground fault alarm t_{g2} PS A	342	ETU	ETU	—	unsigned int	16	– 3	DS129.22
I^4t characteristic for overload protection PS A	345	ETU	—	—	Format (345)	1	—	DS129.26
I^2t characteristic for delayed short-circuit protection PS A	343	ETU	ETU	ETU	Format (343)	1	—	DS129.24
I^2t characteristic for ground-fault protection PS A	344	ETU	ETU	ETU	Format (344)	1	—	DS129.25
Thermal memory PS A	346	ETU	ETU	ETU	Format (346)	1	—	DS129.27
Phase loss sensitivity PS A	347	ETU	—	—	Format (347)	1	—	DS129.28
Cooling time constant PS A	348	ETU	—	—	unsigned int	16	0	DS129.30
Overload parameter I_R parameter set B (PS B)	349	ETU	—	—	unsigned int	16	0	DS129.32

Description	Data point	Source WL	Source VL [1]	Source VL [2]	Format	Length (bits)	Scaling	Contained in DS.Byte
Time-lag class t_R PS B	351	ETU	—	—	unsigned int	16	– 1	DS129.36
Short-circuit protection instantaneous I_i PS B	352	ETU	—	—	unsigned int	16	1	DS129.38
Short-circuit protection delayed I_{sd} PS B	353	ETU	—	—	unsigned int	16	1	DS129.40
Delay time for short-circuit protection t_{sd} PS B	354	ETU	—	—	unsigned int	16	– 3	DS129.42
Overload protection neutral conductor I_N PS B	350	ETU	—	—	unsigned int	16	0	DS129.34
Ground-fault protection I_g PS B	355	ETU	—	—	unsigned int	16	0	DS129.44
Delay time for ground fault t_g PS B	356	ETU	—	—	unsigned int	16	– 3	DS129.46
Ground fault alarm I_{g2} PS B	357	ETU	—	—	unsigned int	16	0	DS129.48
Delay time for ground fault alarm t_{g2} PS B	358	ETU	—	—	unsigned int	16	– 3	DS129.50
I_4t characteristic for overload protection PS B	361	ETU	—	—	Format (345)	1	—	DS129.54
I_2t curve for delayed short-circuit protection PS B	359	ETU	—	—	Format (343)	1	—	DS129.52
I^2t curve for ground-fault protection PS B	360	ETU	—	—	Format (344)	1	—	DS129.53
Thermal memory PS B	362	ETU	—	—	Format (346)	1	—	DS129.55
Phase loss sensitivity PS B	363	ETU	—	—	Format (347)	1	—	DS129.56
Cooling time constant PS B	364	ETU	—	—	unsigned int	16	0	DS129.58
Load shedding	367	ETU	—	—	unsigned int	16	0	DS129.60
Load pick up	368	ETU	—	—	unsigned int	16	0	DS129.62
Delay time for load shedding/pick up	366	ETU	—	—	unsigned char	8	0	DS129.64
Overload pre-alarm (VL only)	369	—	ETU	—	unsigned int	16	0	DS128.44
Active parameter set	370	ETU	—	ETU	Format (370)	1	—	DS129.65

1 LCD ETU with COM11

2 communication-capable ETU with COM21

8.6.11 Parameters of the SENTRON circuit breakers (extended protection function)

The table below contains the parameters of the SENTRON circuit breakers (extended protection function):

Table 8- 11 Parameters of the SENTRON circuit breakers (extended protection function)

Description	Data point	Source WL	Source VL [1]	Source VL [2]	Format	Length (bits)	Scaling	Contained in DS.Byte
Current unbalance	139	Meter. fct.	ETU	ETU	unsigned char	8	0	DS128.41
Delay time for current unbalance	140	Meter. fct.	ETU	—	unsigned char	8	0	DS128.42
Active power in normal direction	141	Meter. fct.	—	—	unsigned int	16	0	DS128.14
Delay time for active power in normal direction	142	Meter. fct.	—	—	unsigned char	8	0	DS128.18
Active power in reverse direction	143	Meter. fct.	—	—	unsigned int	16	0	DS128.16
Delay time for active power in reverse direction	144	Meter. fct.	—	—	unsigned char	8	0	DS128.19
Underfrequency	147	Meter. fct.	—	—	unsigned int	16	0	DS128.22
Delay time for underfrequency	148	Meter. fct.	—	—	unsigned char	8	0	DS128.25
Overfrequency	149	Meter. fct.	—	—	unsigned int	16	0	DS128.26
Delay time for overfrequency	150	Meter. fct.	—	—	unsigned char	8	0	DS128.24
Voltage unbalance	151	Meter. fct.	—	—	unsigned char	8	0	DS128.32
Delay time for voltage unbalance	152	Meter. fct.	—	—	unsigned char	8	0	DS128.33
Undervoltage	153	Meter. fct.	—	—	unsigned int	16	0	DS128.34
Delay time for undervoltage	154	Meter. fct.	—	—	unsigned char	8	0	DS128.38
Overvoltage	155	Meter. fct.	—	—	unsigned int	16	0	DS128.36
Delay time for overvoltage	156	Meter. fct.	—	—	unsigned char	8	0	DS128.39
THD of current	158	Meter. fct.	—	—	unsigned char	8	0	DS128.28
Delay time of THD of current	159	Meter. fct.	—	—	unsigned char	8	0	DS128.29

Description	Data point	Source WL	Source VL [1]	Source VL [2]	Format	Length (bits)	Scaling	Contained in DS.Byte
THD of voltage	160	Meter. fct.	—	—	unsigned char	8	0	DS128.30
Delay time of THD of voltage	161	Meter. fct.	—	—	unsigned char	8	0	DS128.31

[1] LCD ETU with COM11

[2] communication-capable ETU with COM21

8.6.12 Parameters of the SENTRON circuit breakers (parameters for threshold value alarms)

The table below contains the parameters of the SENTRON circuit breakers (parameters for threshold warnings):

Table 8- 12 Parameters of the SENTRON circuit breakers (parameters for threshold warnings)

Description	Data point	Source WL	Source VL [1]	Source VL [2]	Format	Length (bits)	Scaling	Contained in DS.Byte
Overcurrent	267	Meter. fct.	ETU	—	unsigned int	16	0	DS130.48
Delay time for overcurrent	268	Meter. fct.	ETU	—	unsigned char	8	0	DS130.56
Current that flows to ground	269	Meter. fct.	ETU	—	unsigned int	16	0	DS130.50
Delay time of current that flows to ground	270	Meter. fct.	ETU	—	unsigned char	8	0	DS130.57
Overcurrent in neutral conductor	271	Meter. fct.	ETU	—	unsigned int	8	0	DS130.52
Delay time for overcurrent in neutral conductor	272	Meter. fct.	ETU	—	unsigned char	8	0	DS130.58
Phase unbalance current	273	Meter. fct.	ETU	—	unsigned char	8	0	DS130.59
Delay time for current phase unbalance	274	Meter. fct.	ETU	—	unsigned char	8	0	DS130.60
Long-time mean value of current	275	Meter. fct.	ETU	—	unsigned int	16	0	DS130.54
Delay time for long-time mean value of current	276	Meter. fct.	ETU	—	unsigned char	8	0	DS130.61
Undervoltage	277	Meter. fct.	—	—	unsigned int	16	0	DS130.62
Delay time for undervoltage	278	Meter. fct.	—	—	unsigned char	8	0	DS130.64
Phase unbalance voltage	279	Meter. fct.	—	—	unsigned char	8	0	DS130.65
Delay time for voltage phase unbalance	280	Meter. fct.	—	—	unsigned char	8	0	DS130.66
Overvoltage	281	Meter. fct.	—	—	unsigned int	16	0	DS130.68
Delay time for overvoltage	282	Meter. fct.	—	—	unsigned char	8	0	DS130.70
Active power in normal direction	283	Meter. fct.	—	—	unsigned int	16	0	DS130.4
Delay time for active power in normal direction	284	Meter. fct.	—	—	unsigned char	8	0	DS130.12
Active power in reverse direction	285	Meter. fct.	—	—	unsigned int	16	0	DS130.6

Description	Data point	Source WL	Source VL [1]	Source VL [2]	Format	Length (bits)	Scaling	Contained in DS.Byte
Delay time for active power in reverse direction	286	Meter. fct.	—	—	unsigned char	8	0	DS130.13
Power factor, capacitive	287	Meter. fct.	—	—	signed int	16	– 3	DS130.8
Delay time for power factor, capacitive	288	Meter. fct.	—	—	unsigned char	8	0	DS130.14
Power factor, inductive	289	Meter. fct.	—	—	signed int	16	– 3	DS130.10
Delay time for power factor, inductive	290	Meter. fct.	—	—	unsigned char	8	0	DS130.15
Long-time mean value of active power	291	Meter. fct.	—	—	unsigned int	16	0	DS130.30
Delay time for long-time mean value of active power	292	Meter. fct.	—	—	unsigned char	8	0	DS130.34
Long-time mean value of apparent power	293	Meter. fct.	—	—	unsigned int	16	0	DS130.32
Delay time for long-time mean value of apparent power	294	Meter. fct.	—	—	unsigned char	8	0	DS130.35
Long-time mean value of reactive power	295	Meter. fct.	—	—	unsigned int	16	0	DS130.36
Delay time for long-time mean value of reactive power	296	Meter. fct.	—	—	unsigned char	8	0	DS130.40
Reactive power in normal direction	297	Meter. fct.	—	—	unsigned int	16	0	DS130.38
Delay time for reactive power in normal direction	298	Meter. fct.	—	—	unsigned char	8	0	DS130.41
Reactive power in reverse direction	299	Meter. fct.	—	—	unsigned int	16	0	DS130.42
Delay time for reactive power in reverse direction	300	Meter. fct.	—	—	unsigned char	8	0	DS130.46
Apparent power	301	Meter. fct.	—	—	unsigned int	16	0	DS130.44
Delay time for apparent power	302	Meter. fct.	—	—	unsigned char	8	0	DS130.47
Overfrequency	303	Meter. fct.	—	—	unsigned char	8	0	DS130.16
Delay time for overfrequency	304	Meter. fct.	—	—	unsigned char	8	0	DS130.17
Underfrequency	305	Meter. fct.	—	—	unsigned char	8	0	DS130.18
Delay time for underfrequency	306	Meter. fct.	—	—	unsigned char	8	0	DS130.19
THD current	319	Meter. fct.	—	—	unsigned char	8	0	DS130.20
Delay time for THD current	320	Meter. fct.	—	—	unsigned char	8	0	DS130.21
THD voltage	321	Meter. fct.	—	—	unsigned char	8	0	DS130.22

Description	Data point	Source WL	Source VL [1]	Source VL [2]	Format	Length (bits)	Scaling	Contained in DS.Byte
Delay time for THD voltage	322	Meter. fct.	—	—	unsigned char	8	0	DS130.23
Peak factor	323	Meter. fct.	—	—	unsigned int	16	– 2	DS130.24
Delay time for peak factor	324	Meter. fct.	—	—	unsigned char	8	0	DS130.28
Form factor	325	Meter. fct.	—	—	unsigned int	16	– 2	DS130.26
Delay time for the form factor	326	Meter. fct.	—	—	unsigned char	8	0	DS130.29

1 LCD ETU with COM11

2 communication-capable ETU with COM21

8.6.13 Parameters of the SENTRON circuit breakers (communication, measured value adjustment, etc.)

The table below contains the parameters of the SENTRON circuit breakers (communication, measured value adjustment, etc.):

Table 8- 13 Parameters of the SENTRON circuit breakers (communication, measured value adjustment, etc.)

Description	Data point	Source WL	Source VL [1]	Source VL [2]	Format	Length (bits)	Scaling	Contained in DS.Byte
MODBUS address	5	COM16	COM11	COM21	unsigned int	8	0	DS160.5
Basic type of MODBUS data transfer	6	COM16	COM11	COM21	Hex	2	—	DS160.6
Data in the cyclic profile of MODBUS	7	COM16	COM11	COM21	Format (7)	224	—	DS160.8
IP address of the BDA PLUS	10	BDA PLUS	—	—	Format (10)	40	—	DS160.42
Assignment of the configurable digital output module	129	conf. DO	—	—	Format (129)	168	—	DS128.46
Normal direction of incoming supply	145	Meter. fct.	—	—	Format (145)	1	—	DS128.20
Direction of rotation of phase	146	Meter. fct.	—	—	Format (146)	1	—	DS128.21
The voltage transformer can be star or delta-connected on the primary side	162	Meter. fct.	—	—	Format (162)	1	—	DS128.4
Rated voltage of the system (on the primary side)	164	Meter. fct.	—	—	unsigned int	16	0	DS128.6
Secondary voltage of transformer	165	Meter. fct.	—	—	unsigned char	8	0	DS128.8
Length of period for calculating long-time mean value	166	Meter. fct.	—	—	unsigned char	8	0	DS128.9
Number of sub-periods for calculating long-time mean value	167	Meter. fct.	—	—	unsigned char	8	0	DS128.10
Lower limit of power transmission	372	ETU	—	—	unsigned int	16	0	DS128.12
Ground fault transformer detection type	410	ETU	ETU	ETU	Format (410)	2	—	DS97.44 DS129.69

1 LCD ETU with COM11

2 communication-capable ETU with COM21

8.7 Register blocks for SENTRON WL

8.7.1 Register block RB 51 main overview

The table below shows the content of register block 51 that copies the most important information from other register blocks and makes it available in the form of a complete overview. This register block is used for displaying the data of the main overview.

The table below contains the register blocks RB 51: Main overview (length 119 registers, read-only):

Table 8- 14 Content of register block 51

Register			Description	Data point	Source WL	Format	Length (bits)	Scaling
Address		High/Low						
dec	hex							
13057	0x3301	-	Trip log of the last 5 tripping operations with time	15	COM16	Format (15)	480	—
13087	0x331F	-	Event log of the last 10 events with time	16	COM16	Format (16)	960	—
13147	0x335B	LOW	Status of the connected Modbus	17	COM16	Format (17)	3	—
13147	0x335B	HIGH	Controls the commands/functions (e.g. delete/reset min./max. values) of the communication module	18	COM16	Format (18)	8	—
13148	0x335C	LOW	Controls the outputs of the communication module (e.g. switching the breaker)	19	COM16	Format (19)	8	—
13148	0x335C	HIGH	Shows the phase with maximum load	373	ETU	Format (373)	3	—
13149	0x335D	-	Mean value of the power factor	168	Meter. fct.	signed int	16	–3
13150	0x335E	-	Current of phase with maximum load	374	ETU	unsigned int	16	0
13151	0x335F	-	Time until presumed overload trip	379	ETU	unsigned int	16	0
13152	0x3360	-	Current in neutral conductor	375	ETU	unsigned int	16	0
13153	0x3361	-	Current which flows to ground	376	ETU	unsigned int	16	0
13154	0x3362	-	System time of the circuit breaker	90	COM16	Time	64	—
13158	0x3366	LOW	Position of the circuit breaker in the frame	24	COM16	Format (24)	4	—
13158	0x3366	HIGH	Status of the circuit breaker (on/off/powered, etc.)	328	BSS	Format (328)	8	—
13159	0x3367	-	Overload parameter I_R parameter set A (PS A)	333	ETU	unsigned int	16	0

Register			Description	Data point	Source WL	Format	Length (bits)	Scaling
Address		High/Low						
dec	hex							
13160	0x3368	-	Overload parameter I_R parameter set B (PS B)	349	ETU	unsigned int	16	0
13161	0x3369	-	Rating plug	377	ETU	unsigned int	16	0
13162	0x336A	LOW	Active parameter set	370	ETU	Format (370)	1	—
13162	0x336A	-	Reserved	—	—	—	72	—
13167	0x336F	LOW	Property byte (trip log of the last 5 tripping operations with time)	—	COM16	PB	8	—
13167	0x336F	HIGH	Property byte (event log of the last 10 events with time)	—	COM16	PB	8	—
13168	0x3370	LOW	Property byte for byte 180 (status of the connected Modbus)	—	COM16	PB	8	—
13168	0x3370	HIGH	Property byte (controls the commands/functions (e.g. delete/reset min./max. values) of the communication module)	—	COM16	PB	8	—
13169	0x3371	-	Property byte (controls the outputs of the communication module (e.g. switching the breaker))	—	COM16	PB	8	—
13169	0x3371	HIGH	Property byte for byte 183 (shows the phase with maximum load)	—	ETU	PB	8	—
13170	0x3372	LOW	Property byte (mean value of the power factor)	—	Meter. fct.	PB	8	—
13170	0x3372	HIGH	Property byte (current of phase with maximum load)	—	ETU	PB	8	—
13171	0x3373	LOW	Property byte for byte 188 (time until presumed overload trip)	—	ETU	PB	8	—
13171	0x3373	HIGH	Property byte (current in neutral conductor)	—	ETU	PB	8	—
13172	0x3374	LOW	Property byte (current which flows to ground)	—	ETU	PB	8	—
13172	0x3374	HIGH	Property byte (system time of the circuit breaker)	—	COM16	PB	8	—
13173	0x3375	LOW	Property byte (position of the circuit breaker in the frame)	—	COM16	PB	8	—
13173	0x3375	HIGH	Property byte (status of the circuit breaker (on/off/powered, etc.))	—	BSS	PB	8	—
13174	0x3376	LOW	Property byte (overload parameter I_R parameter set A (PS A))	—	ETU	PB	8	—
13174	0x3376	HIGH	Property byte (overload parameter I_R parameter set B (PS B))	—	ETU	PB	8	—

Register			Description	Data point	Source WL	Format	Length (bits)	Scaling
Address		High/Low						
dec	hex							
13175	0x3377	LOW	Property byte (rating plug)	—	ETU	PB	8	—
13175	0x3377	HIGH	Property byte (active parameter set)	—	ETU	PB	8	—

8.7.2 Register block RB 64 data of the harmonic analysis

The table below shows the content of register block 64 in which the components of the harmonics of current and voltage are transmitted. The content is described in the format (309). The property byte provides information as to whether the data point is available. Generally, a harmonic analysis is only available with a SENTRON WL with metering function PLUS.

The table below contains the register blocks RB 64: Data of the harmonic analysis (length 66 registers, read-only):

Table 8- 15 Content of register block 64

Register			Description	Data point	Source WL	Format	Length (bits)	Scaling
Address		High/Low						
dec	hex							
16385	0x4001	-	Harmonics of current/voltage to the 29th	309	Meter. fct.	Format (309)	928	0
16443	0x403B	-	Reserved	—	—	—	112	—
16450	0x4042	LOW	Property byte (harmonics of current/voltage to the 29th)	309	Meter. fct.	PB	8	—

8.7.3 Register block RB 68 data of the CubicleBUS module

The table below shows the content of register block 68 via which the outputs of the digital output modules can be read and also controlled, and the system time can be read out. In addition, it is possible to set the system time and also the outputs of the communication module for switching breakers on or off.

The table below contains the register blocks RB 68: Data of the CubicleBUS module (length 23 registers, read/write):

Table 8- 16 Content of register block 68

Register			Description	Data point	Source WL	Format	Length (bits)	Scaling
Address		High/Low						
dec	hex							
17409	0x4401	-	Header; value 0x00 00 00 00	—	COM16	—	32	—
17411	0x4403	-	System time of the circuit breaker	90	COM16	Time	64	—
17415	0x4407	LOW	Controls the outputs of the communication module (e.g. switching the breaker)	19	COM16	Format (19)	8	—
17415	0x4407	HIGH	Reserved	—	—	—	8	—
17416	0x4408	LOW	Status of the outputs of the digital output module 1	118	DO1	Hex	8	—
17416	0x4408	HIGH	Status of the outputs of the digital output module 2	123	DO2	Hex	8	—
17417	0x4409	-	Reserved	—	—	—	192	—
17429	0x4415	LOW	Property byte (system time of the circuit breaker)	—	COM16	PB	8	—
17429	0x4415	HIGH	Property byte (controls the outputs of the communication module (e.g. switching the breaker))	—	COM16	PB	8	—
17430	0x4416	LOW	Reserved	—	—	—	8	—
17430	0x4416	HIGH	Property byte (status of the outputs of the digital output module 1)	—	DO1	PB	8	—
17431	0x4417	LOW	Property byte (status of the outputs of the digital output module 2)	—	DO2	PB	8	—

8.7.4 Register block RB 69 status of the modules

The table below shows the content of register block 69 in which the statuses of the inputs on the digital input modules and the input on the COM16 module are transmitted. It also contains the switch positions on the digital input modules and output modules on the CubicleBUS.

The table below contains the register blocks RB 69: Status of the modules (length 22 registers, read-only):

Table 8- 17 Content of register block 69

Register			Description	Data point	Source WL	Format	Length (bits)	Scaling
Address		High/Low						
dec	hex							
17665	0x4501	LOW	Status of the inputs of digital input module 1	110	DI1	Hex	8	—
17665	0x4501	HIGH	Status of the inputs of digital input module 2	114	DI2	Hex	8	—
17666	0x4502	LOW	Controls the outputs of the communication module (e.g. switching the breaker) and checkback signals	19	COM16	Format (19)	8	—
17666	0x4502	HIGH	Switch position at the digital input module 1	111	DI1	Format (111)	8	—
17667	0x4503	LOW	Switch position at the digital input module 2	115	DI2	Format (111)	8	—
17667	0x4503	HIGH	Switch position at the digital output module 1	119	DO1	Format (119)	8	—
17668	0x4504	LOW	Switch position at the digital output module 2	124	DO2	Format (119)	8	—
17668	0x4504	-	Reserved	—	—	—	32	—
17670	0x4506	HIGH	Communication module write protection (WriteEnable)	14	COM16	Format (14)	1	—
17671	0x4507	LOW	Reserved	—	—	—	8	—
17671	0x4507	HIGH	6 communication module bits for the digital configurable output module	426	COM16	Format (426)	6	—
17672	0x4508	-	Reserved	—	—	—	120	—
17679	0x450F	HIGH	Property byte (6 Modbus communication module bits for the digital configurable output module)	—	COM16	PB	8	—
17680	0x4510	LOW	Property byte (status of the inputs of the digital input module 1)	—	DI1	PB	8	—
17680	0x4510	HIGH	Property byte (status of the inputs of the digital input module 2)	—	DI2	PB	8	—

Register			Description	Data point	Source WL	Format	Length (bits)	Scaling
Address		High/Low						
dec	hex							
17681	0x4511	LOW	Property byte (controls the outputs of the communication module (e.g. switching the breaker) and checkback signals)	—	COM16	PB	8	—
17681	0x4511	HIGH	Property byte (switch position at the digital input module 1)	—	DI1	PB	8	—
17682	0x4512	LOW	Property byte (switch position at the digital input module 2)	—	DI2	PB	8	—
17682	0x4512	HIGH	Property byte (switch position at the digital output module 1)	—	DO1	PB	8	—
17683	0x4513	LOW	Property byte (switch position at the digital output module 2)	—	DO2	PB	8	—
17683	0x4513	-	Reserved	—	—	—	32	—
17685	0x4515	HIGH	Property byte (communication module write protection (WriteEnable))	—	COM16	PB	8	—
17686	0x4516	LOW	Reserved	—	—	—	8	—

8.7.5 Register block RB 72 min. and max. measured values

The table below shows the content of register block 72 in which the minimum and maximum measured values of the currents are transmitted. It also contains the associated time stamps for these minimum and maximum measured values.

The table below contains the register blocks RB 72: Min./max. measured values of the currents and the associated time stamps (length 118 registers, read-only):

Table 8- 18 Content of register block 72

Register			Description	Data point	Source WL	Format	Length (bits)	Scaling
Address		High/Low						
dec	hex							
18433	0x4801	-	Minimum current in phase 1	384	ETU	unsigned int	16	0
18434	0x4802	-	Maximum current in phase 1	385	ETU	unsigned int	16	0
18435	0x4803	-	Minimum current in phase 2	386	ETU	unsigned int	16	0
18436	0x4804	-	Maximum current in phase 2	387	ETU	unsigned int	16	0
18437	0x4805	-	Minimum current in phase 3	388	ETU	unsigned int	16	0
18438	0x4806	-	Maximum current in phase 3	389	ETU	unsigned int	16	0
18439	0x4807	-	Minimum current in neutral conductor	390	ETU	unsigned int	16	0
18440	0x4808	-	Maximum current in neutral conductor	391	ETU	unsigned int	16	0
18441	0x4809	-	Minimum current which flows to ground	392	ETU	unsigned int	16	0
18442	0x480A	-	Maximum current which flows to ground	393	ETU	unsigned int	16	0
18443	0x480B	-	Minimum mean value over the three phases	394	ETU	unsigned int	16	0
18444	0x480C	-	Maximum mean value over the three phases	395	ETU	unsigned int	16	0
18445	0x480D	-	Minimum long-time mean value for current	244	Meter. fct.	unsigned int	16	0
18446	0x480E	-	Maximum long-time mean value for current	245	Meter. fct.	unsigned int	16	0
18447	0x480F	LOW	Minimum peak factor	263	Meter. fct.	unsigned char	8	–1
18447	0x480F	HIGH	Maximum peak factor	264	Meter. fct.	unsigned char	8	–1
18448	0x4810	LOW	Minimum form factor	265	Meter. fct.	unsigned char	8	–1
18448	0x4810	HIGH	Maximum of the form factor	266	Meter. fct.	unsigned char	8	–1
18449	0x4811	-	TS minimum current in phase L1	25	COM16	Time	64	—
18453	0x4815	-	TS maximum current in phase L1	26	COM16	Time	64	—

Register			Description	Data point	Source WL	Format	Length (bits)	Scaling
Address		High/Low						
dec	hex							
18457	0x4819	-	TS minimum current in phase L2	27	COM16	Time	64	—
18461	0x481D	-	TS maximum current in phase L2	28	COM16	Time	64	—
18465	0x4821	-	TS minimum current in phase L3	29	COM16	Time	64	—
18469	0x4825	-	TS maximum current in phase L3	30	COM16	Time	64	—
18473	0x4829	-	TS minimum mean value over the three phases	31	COM16	Time	64	—
18477	0x482D	-	TS maximum mean value over the three phases	32	COM16	Time	64	—
18481	0x4831	-	TS minimum long-time mean value for current	55	COM16	Time	64	—
18485	0x4835	-	TS maximum long-time mean value of current	56	COM16	Time	64	—
18489	0x4839	-	TS minimum current in neutral conductor	33	COM16	Time	64	—
18493	0x483D	-	TS maximum current in neutral conductor	34	COM16	Time	64	—
18497	0x4841	-	TS minimum current that flows to ground	35	COM16	Time	64	—
18501	0x4845	-	TS maximum current that flows to ground	36	COM16	Time	64	—
18505	0x4849	-	TS minimum peak factor	65	COM16	Time	64	—
18509	0x484D	-	TS maximum peak factor	66	COM16	Time	64	—
18513	0x4851	-	TS minimum form factor	67	COM16	Time	64	—
18517	0x4855	-	TS maximum form factor	68	COM16	Time	64	—
18521	0x4859	-	Reserved	—	—	—	192	—
18533	0x4865	LOW	Property byte (minimum current in phase 1)	—	ETU	PB	8	—
18533	0x4865	HIGH	Property byte (maximum current in phase 1)	—	ETU	PB	8	—
18534	0x4866	LOW	Property byte (minimum current in phase 2)	—	ETU	PB	8	—
18534	0x4866	HIGH	Property byte (maximum current in phase 2)	—	ETU	PB	8	—
18535	0x4867	LOW	Property byte (minimum current in phase 3)	—	ETU	PB	8	—
18535	0x4867	HIGH	Property byte (maximum current in phase 3)	—	ETU	PB	8	—
18536	0x4868	LOW	Property byte (minimum current in neutral conductor)	—	ETU	PB	8	—

Register			Description	Data point	Source WL	Format	Length (bits)	Scaling
Address		High/Low						
dec	hex							
18536	0x4868	HIGH	Property byte (maximum current in neutral conductor)	—	ETU	PB	8	—
18537	0x4869	LOW	Property byte (minimum current that flows to ground)	—	ETU	PB	8	—
18537	0x4869	HIGH	Property byte for byte 18 (maximum current that flows to ground)	—	ETU	PB	8	—
18538	0x486A	LOW	Property byte (minimum mean value over the three phases)	—	ETU	PB	8	—
18538	0x486A	HIGH	Property byte (maximum mean value over the three phases)	—	ETU	PB	8	—
18539	0x486B	LOW	Property byte (minimum long-time mean value for current)	—	Meter. fct.	PB	8	—
18539	0x486B	HIGH	Property byte (maximum long-time mean value for current)	—	Meter. fct.	PB	8	—
18540	0x486C	LOW	Property byte (minimum peak factor)	—	Meter. fct.	PB	8	—
18540	0x486C	HIGH	Property byte (maximum peak factor)	—	Meter. fct.	PB	8	—
18541	0x486D	LOW	Property byte (minimum form factor)	—	Meter. fct.	PB	8	—
18541	0x486D	HIGH	Property byte (maximum form factor)	—	Meter. fct.	PB	8	—
18542	0x486E	LOW	Property byte (TS minimum current in phase L1)	—	COM16	PB	8	—
18542	0x486E	HIGH	Property byte (TS maximum current in phase L1)	—	COM16	PB	8	—
18543	0x486F	LOW	Property byte (TS minimum current in phase L2)	—	COM16	PB	8	—
18543	0x486F	HIGH	Property byte (TS maximum current in phase L2)	—	COM16	PB	8	—
18544	0x4870	LOW	Property byte (TS minimum current in phase L3)	—	COM16	PB	8	—
18544	0x4870	HIGH	Property byte (TS maximum current in phase L3)	—	COM16	PB	8	—
18545	0x4871	LOW	Property byte (TS minimum mean value over the three phases)	—	COM16	PB	8	—
18545	0x4871	HIGH	Property byte (TS maximum mean value over the three phases)	—	COM16	PB	8	—
18546	0x4872	LOW	Property byte (TS minimum long-time mean value for current)	—	COM16	PB	8	—

Register			Description	Data point	Source WL	Format	Length (bits)	Scaling
Address		High/Low						
dec	hex							
18546	0x4872	HIGH	Property byte (TS maximum long-time mean value for current)	—	COM16	PB	8	—
18547	0x4873	LOW	Property byte (TS minimum current in neutral conductor)	—	COM16	PB	8	—
18547	0x4873	HIGH	Property byte (TS maximum current in neutral conductor)	—	COM16	PB	8	—
18548	0x4874	LOW	Property byte (TS minimum current that flows to ground)	—	COM16	PB	8	—
18548	0x4874	HIGH	Property byte (TS maximum current that flows to ground)	—	COM16	PB	8	—
18549	0x4875	LOW	Property byte (TS minimum peak factor)	—	COM16	PB	8	—
18549	0x4875	HIGH	Property byte (TS maximum peak factor)	—	COM16	PB	8	—
18550	0x4876	LOW	Property byte (TS minimum form factor)	—	COM16	PB	8	—
18550	0x4876	HIGH	Property byte (TS maximum form factor)	—	COM16	PB	8	—

8.7.6 Register block RB 73 min. and max. measured values of the voltages

The table below shows the content of register block 73 in which the minimum and maximum measured values of the voltages are transmitted. It also contains the associated time stamps for these minimum and maximum measured values.

The table below contains the register blocks RB 73: Min./max. measured values of the voltages and the associated time stamps (length 87 registers, read-only):

Table 8- 19 Content of register block 73

Register			Description	Data point	Source WL	Format	Length (bits)	Scaling
Address		High/Low						
dec	hex							
18689	0x4901	-	Minimum phase-to-phase voltage between phase L1 and L2	205	Meter. fct.	unsigned int	16	0
18690	0x4902	-	Maximum phase-to-phase voltage between phase L1 and L2	206	Meter. fct.	unsigned int	16	0
18691	0x4903	-	Minimum phase-to-phase voltage between phase L2 and L3	207	Meter. fct.	unsigned int	16	0
18692	0x4904	-	Maximum phase-to-phase voltage between phase L2 and L3	208	Meter. fct.	unsigned int	16	0
18693	0x4905	-	Minimum phase-to-phase voltage between phase L3 and L1	209	Meter. fct.	unsigned int	16	0
18694	0x4906	-	Maximum phase-to-phase voltage between phase L3 and L1	210	Meter. fct.	unsigned int	16	0
18695	0x4907	-	Minimum of the neutral point voltage phase L1	211	Meter. fct.	unsigned int	16	0
18696	0x4908	-	Maximum of the neutral point voltage phase L1	212	Meter. fct.	unsigned int	16	0
18697	0x4909	-	Minimum of the neutral point voltage phase L2	213	Meter. fct.	unsigned int	16	0
18698	0x490A	-	Maximum of the neutral point voltage phase L2	214	Meter. fct.	unsigned int	16	0
18699	0x490B	-	Minimum of the neutral point voltage phase L3	215	Meter. fct.	unsigned int	16	0
18700	0x490C	-	Maximum of the neutral point voltage phase L3	216	Meter. fct.	unsigned int	16	0
18701	0x490D	-	TS minimum phase-to-phase voltage between phase L1 and L2	37	COM16	Time	64	—
18705	0x4911	-	TS maximum phase-to-phase voltage between phase L1 and L2	38	COM16	Time	64	—
18709	0x4915	-	TS minimum phase-to-phase voltage between phase L2 and L3	39	COM16	Time	64	—
18713	0x4919	-	TS maximum phase-to-phase voltage between phase L2 and L3	40	COM16	Time	64	—
18717	0x491D	-	TS minimum phase-to-phase voltage between phase L3 and L1	41	COM16	Time	64	—
18721	0x4921	-	TS maximum phase-to-phase voltage between phase L3 and L1	42	COM16	Time	64	—

Register			Description	Data point	Source WL	Format	Length (bits)	Scaling
Address		High/Low						
dec	hex							
18725	0x4925	-	TS minimum of the neutral point voltage phase L1	43	COM16	Time	64	—
18729	0x4929	-	TS maximum of the neutral point voltage phase L1	44	COM16	Time	64	—
18733	0x492D	-	TS minimum of the neutral point voltage phase 2	45	COM16	Time	64	—
18737	0x4931	-	TS maximum of the neutral point voltage phase L2	46	COM16	Time	64	—
18741	0x4935	-	TS minimum of the neutral point voltage phase L3	47	COM16	Time	64	—
18745	0x4939	-	TS maximum of the neutral point voltage phase L3	48	COM16	Time	64	—
18749	0x493D	-	Reserved	—	—	—	240	—
18764	0x494C	LOW	Property byte (minimum phase-to-phase voltage between phase L1 and L2)	—	Meter. fct.	PB	8	—
18764	0x494C	HIGH	Property byte (maximum phase-to-phase voltage between phase L1 and L2)	—	Meter. fct.	PB	8	—
18765	0x494D	LOW	Property byte (minimum phase-to-phase voltage between phase L2 and L3)	—	Meter. fct.	PB	8	—
18765	0x494D	HIGH	Property byte (maximum phase-to-phase voltage between phase L2 and L3)	—	Meter. fct.	PB	8	—
18766	0x494E	LOW	Property byte (minimum phase-to-phase voltage between phase L3 and L1)	—	Meter. fct.	PB	8	—
18766	0x494E	HIGH	Property byte for byte 10 (maximum phase-to-phase voltage between phase L3 and L1)	—	Meter. fct.	PB	8	—
18767	0x494F	LOW	Property byte (minimum of the neutral point voltage phase L1)	—	Meter. fct.	PB	8	—
18767	0x494F	HIGH	Property byte (maximum of the neutral point voltage phase L1)	—	Meter. fct.	PB	8	—
18768	0x4950	LOW	Property byte (minimum of the neutral point voltage phase L2)	—	Meter. fct.	PB	8	—
18768	0x4950	HIGH	Property byte (maximum of the neutral point voltage phase L2)	—	Meter. fct.	PB	8	—
18769	0x4951	LOW	Property byte (minimum of the neutral point voltage phase L3)	—	Meter. fct.	PB	8	—
18769	0x4951	HIGH	Property byte (maximum of the neutral point voltage phase L3)	—	Meter. fct.	PB	8	—

Register			Description	Data point	Source WL	Format	Length (bits)	Scaling
Address		High/Low						
dec	hex							
18770	0x4952	LOW	Property byte (TS minimum phase-to-phase voltage between phase L1 and L2)	—	COM16	PB	8	—
18770	0x4952	HIGH	Property byte (TS maximum phase-to-phase voltage between phase L1 and L2)	—	COM16	PB	8	—
18771	0x4953	LOW	Property byte (TS minimum phase-to-phase voltage between phase L2 and L3)	—	COM16	PB	8	—
18771	0x4953	HIGH	Property byte for byte 48 (TS maximum phase-to-phase voltage between phase L2 and L3)	—	COM16	PB	8	—
18772	0x4954	LOW	Property byte (TS minimum phase-to-phase voltage between phase L3 and L1)	—	COM16	PB	8	—
18772	0x4954	HIGH	Property byte (TS maximum phase-to-phase voltage between phase L3 and L1)	—	COM16	PB	8	—
18773	0x4955	LOW	Property byte (TS minimum of the neutral point voltage phase L1)	—	COM16	PB	8	—
18773	0x4955	HIGH	Property byte (TS maximum of the neutral point voltage phase L1)	—	COM16	PB	8	—
18774	0x4956	LOW	Property byte (TS minimum of the neutral point voltage phase 2)	—	COM16	PB	8	—
18774	0x4956	HIGH	Property byte (TS maximum of the neutral point voltage phase L2)	—	COM16	PB	8	—
18775	0x4957	LOW	Property byte (TS minimum of the neutral point voltage phase L3)	—	COM16	PB	8	—
18775	0x4957	HIGH	Property byte (TS maximum of the neutral point voltage phase L3)	—	COM16	PB	8	—

8.7.7 Register block RB 74 min. and max. measured values of the powers

The table below shows the content of register block 74 in which the minimum and maximum measured values of the powers are transmitted. It also contains the associated time stamps for these minimum and maximum measured values.

Table 8- 20 Content of register block 74

Register			Description	Data point	Source WL	Format	Length (bits)	Scaling
Address		High/Low						
dec	hex							
18945	0x4A01	-	Minimum of the mean value of the power factor	242	Meter. fct.	signed int	16	– 3
18946	0x4A02	-	Maximum of the mean value of the power factor	243	Meter. fct.	signed int	16	– 3
18947	0x4A03	-	Minimum of the mean value of the apparent power	246	Meter. fct.	unsigned int	16	0
18948	0x4A04	-	Maximum of the mean value of the apparent power	247	Meter. fct.	unsigned int	16	0
18949	0x4A05	-	Minimum of the mean value of the active power	250	Meter. fct.	signed int	16	0
18950	0x4A06	-	Maximum of the mean value of the active power	251	Meter. fct.	signed int	16	0
18951	0x4A07	-	Minimum of the mean value of the reactive power	248	Meter. fct.	signed int	16	0
18952	0x4A08	-	Maximum of the mean value of the reactive power	249	Meter. fct.	signed int	16	0
18953	0x4A09	-	TS minimum of the mean value of the apparent power	57	COM16	Time	64	—
18957	0x4A0D	-	TS maximum of the mean value of the apparent power	58	COM16	Time	64	—
18961	0x4A11	-	TS minimum of the mean value of the active power	49	COM16	Time	64	—
18965	0x4A15	-	TS maximum of the mean value of the active power	50	COM16	Time	64	—
18969	0x4A19	-	TS minimum of the mean value of the reactive power	51	COM16	Time	64	—
18973	0x4A1D	-	TS maximum of the mean value of the reactive power	52	COM16	Time	64	—
18977	0x4A21	-	TS min. of the mean value of the power factor	53	COM16	Time	64	—
18981	0x4A25	-	TS max. of the mean value of the power factor	54	COM16	Time	64	—
18985	0x4A29	-	Reserved	—	—	—	320	—
19005	0x4A3D	LOW	Property byte (minimum of the mean value of the power factor)	—	Meter. fct.	PB	8	—
19005	0x4A3D	HIGH	Property byte (maximum of the mean value of the power factor)	—	Meter. fct.	PB	8	—

Register			Description	Data point	Source WL	Format	Length (bits)	Scaling
Address		High/Low						
dec	hex							
19006	0x4A3E	LOW	Property byte (minimum of the mean value of the apparent power)	—	Meter. fct.	PB	8	—
19006	0x4A3E	HIGH	Property byte (maximum of the mean value of the apparent power)	—	Meter. fct.	PB	8	—
19007	0x4A3F	LOW	Property byte (minimum of the mean value of the active power)	—	Meter. fct.	PB	8	—
19007	0x4A3F	HIGH	Property byte (maximum of the mean value of the active power)	—	Meter. fct.	PB	8	—
19008	0x4A40	LOW	Property byte (minimum of the mean value of the reactive power)	—	Meter. fct.	PB	8	—
19008	0x4A40	HIGH	Property byte (maximum of the mean value of the reactive power)	—	Meter. fct.	PB	8	—
19009	0x4A41	LOW	Property byte (TS minimum of the mean value of the apparent power)	—	COM16	PB	8	—
19009	0x4A41	HIGH	Property byte (TS maximum of the mean value of the apparent power)	—	COM16	PB	8	—
19010	0x4A42	LOW	Property byte (TS minimum of the mean value of the active power)	—	COM16	PB	8	—
19010	0x4A42	HIGH	Property byte (TS maximum of the mean value of the active power)	—	COM16	PB	8	—
19011	0x4A43	LOW	Property byte (TS minimum of the mean value of the reactive power)	—	COM16	PB	8	—
19011	0x4A43	HIGH	Property byte (TS maximum of the mean value of the reactive power)	—	COM16	PB	8	—
19012	0x4A44	LOW	Property byte (TS min. of the mean value of the power factor)	—	COM16	PB	8	—
19012	0x4A44	HIGH	Property byte (TS max. of the mean value of the power factor)	—	COM16	PB	8	—

8.7.8 Register block RB 76 min. and max. measured values of the frequency and the THD

The table below shows the content of register block 76 in which the minimum and maximum measured values of the frequency and the THD are transmitted. It also contains the associated time stamps for these minimum and maximum measured values.

The table below contains the register blocks RB 76: Min./max. measured values of the frequency/THD and the associated time stamps (length 46 registers, read-only):

Table 8- 21 Content of register block 76

Register			Description	Data point	Source WL	Format	Length (bits)	Scaling
Address		High/Low						
dec	hex							
19457	0x4C01	-	Maximum frequency	253	Meter. fct.	unsigned int	16	– 2
19458	0x4C02	-	Minimum frequency	252	Meter. fct.	unsigned int	16	– 2
19459	0x4C03	LOW	Minimum THD of current	255	Meter. fct.	unsigned char	8	0
19459	0x4C03	HIGH	Maximum THD of current	256	Meter. fct.	unsigned char	8	0
19460	0x4C04	LOW	Minimum THD of voltage	258	Meter. fct.	unsigned char	8	0
19460	0x4C04	HIGH	Maximum THD of voltage	259	Meter. fct.	unsigned char	8	0
19461	0x4C05	-	TS minimum frequency	59	COM16	Time	64	—
19465	0x4C09	-	TS maximum frequency	60	COM16	Time	64	—
19469	0x4C0D	-	TS minimum THD of current	61	COM16	Time	64	—
19473	0x4C11	-	TS maximum THD of current	62	COM16	Time	64	—
19477	0x4C15	-	TS minimum THD of voltage	63	COM16	Time	64	—
19481	0x4C19	-	TS maximum THD of voltage	64	COM16	Time	64	—
19485	0x4C1D	-	Reserved	—	—	—	192	—
19497	0x4C29	LOW	Property byte (maximum of the frequency)	—	Meter. fct.	PB	8	—
19497	0x4C29	HIGH	Property byte (minimum of the frequency)	—	Meter. fct.	PB	8	—
19498	0x4C2A	LOW	Property byte (minimum THD of current)	—	Meter. fct.	PB	8	—
19498	0x4C2A	HIGH	Property byte (maximum THD of current)	—	Meter. fct.	PB	8	—
19499	0x4C2B	LOW	Property byte (minimum THD of voltage)	—	Meter. fct.	PB	8	—
19499	0x4C2B	HIGH	Property byte (maximum THD of voltage)	—	Meter. fct.	PB	8	—
19500	0x4C2C	LOW	Property byte (TS minimum of the frequency)	—	COM16	PB	8	—

Register			Description	Data point	Source WL	Format	Length (bits)	Scaling
Address		High/Low						
dec	hex							
19500	0x4C2C	HIGH	Property byte (TS maximum of the frequency)	—	COM16	PB	8	—
19501	0x4C2D	LOW	Property byte (TS minimum THD of current)	—	COM16	PB	8	—
19501	0x4C2D	HIGH	Property byte (TS maximum THD of current)	—	COM16	PB	8	—
19502	0x4C2E	LOW	Property byte (TS minimum THD of voltage)	—	COM16	PB	8	—
19502	0x4C2E	HIGH	Property byte (TS maximum THD of voltage)	—	COM16	PB	8	—

8.7.9 Register block RB 77 min. and max. measured values of the temperatures

The table below shows register block 77 in which the minimum and maximum measured values of the temperatures are transmitted. It also contains the associated time stamps for these minimum and maximum measured values.

Table 8- 22 Content of register block 77

Register			Description	Data point	Source WL	Format	Length (bits)	Scaling
Address		High/Low						
dec	hex							
19713	0x4D01	LOW	Minimum temperature in the control cabinet	72	COM16	unsigned char	8	0
19713	0x4D01	HIGH	Maximum temperature in the control cabinet	73	COM16	unsigned char	8	0
19714	0x4D02	LOW	Minimum temperature in the circuit breaker	74	BSS	unsigned char	8	0
19714	0x4D02	HIGH	Maximum temperature in the circuit breaker	75	BSS	unsigned char	8	0
19715	0x4D03	-	TS minimum temperature in the control cabinet	76	COM16	Time	64	—
19719	0x4D07	-	TS maximum temperature in the control cabinet	77	COM16	Time	64	—
19723	0x4D0B	-	TS minimum temperature in the circuit breaker	78	COM16	Time	64	—
19727	0x4D0F	-	TS maximum temperature in the circuit breaker	79	COM16	Time	64	—
19731	0x4D13	-	Reserved	—	—	—	112	—
19738	0x4D1A	LOW	Property byte (minimum temperature in the control cabinet)	—	COM16	PB	8	—
19738	0x4D1A	HIGH	Property byte (maximum temperature in the control cabinet)	—	COM16	PB	8	—
19739	0x4D1B	LOW	Property byte (minimum temperature in the circuit breaker)	—	BSS	PB	8	—
19739	0x4D1B	HIGH	Property byte (maximum temperature in the circuit breaker)	—	BSS	PB	8	—
19740	0x4D1C	LOW	Property byte (TS minimum temperature in the control cabinet)	—	COM16	PB	8	—
19740	0x4D1C	HIGH	Property byte (TS maximum temperature in the control cabinet)	—	COM16	PB	8	—
19741	0x4D1D	LOW	Property byte (TS minimum temperature in the circuit breaker)	—	COM16	PB	8	—
19741	0x4D1D	HIGH	Property byte (TS maximum temperature in the circuit breaker)	—	COM16	PB	8	—

8.7.10 Register block RB 91 statistics information

The table below shows the content of register block 91 in which the statistical information on the SENTRON circuit breakers is transmitted. As with the other register blocks, the property of each data point is additionally transmitted in the property byte.

The table below contains the register blocks RB 91: Statistical information (length 42 registers, read-only):

Table 8- 23 Content of register block 91

Register			Description	Data point	Source WL	Format	Length (bits)	Scaling
Address		High/Low						
dec	hex							
23297	0x5B01	-	Number of switching operations under load	80	COM16	unsigned int	16	0
23298	0x5B02	-	Number of switching operations caused by trips	81	COM16	unsigned int	16	0
23299	0x5B03	-	Switching cycle counter (for switching cycle on/off)	82	COM16	unsigned int	16	0
23300	0x5B04	-	Runtime meter (when On + current > 0)	83	COM16	unsigned long	32	0
23302	0x5B06	-	Date of the last parameter change	84	COM16	Time	64	—
23306	0x5B0A	-	Number of short-circuit trips (SI)	104	ETU	unsigned int	16	0
23307	0x5B0B	-	Number of overload trips (L)	105	ETU	unsigned int	16	0
23308	0x5B0C	-	Number of ground-fault tripping operations (G)	106	ETU	unsigned int	16	0
23309	0x5B0D	-	Total of deactivated I^2t values L1, L2, L3, N	107	ETU	Format (107)	128	0
23317	0x5B15	LOW	Maintenance information about the main contacts	405	ETU	Format (405)	2	—
23317	0x5B15	-	Reserved	—	—	—	56	—
23321	0x5B19	-	Modules connected to the CubicleBUS	88	COM16	Format (88)	32	—
23323	0x5B1B	-	Reserved	—	—	—	144	—
23332	0x5B24	LOW	Property byte (number of switching operations under load)	—	COM16	PB	8	—
23332	0x5B24	HIGH	Property byte (number of switching operations caused by trips)	—	COM16	PB	8	—
23333	0x5B25	LOW	Property byte (switching cycle counter (for On/Off switching cycle))	—	COM16	PB	8	—
23333	0x5B25	HIGH	Property byte (runtime meter (when On + current > 0))	—	COM16	PB	8	—
23334	0x5B26	LOW	Property byte (date of the last parameter change)	—	COM16	PB	8	—

Register			Description	Data point	Source WL	Format	Length (bits)	Scaling
Address		High/Low						
dec	hex							
23334	0x5B26	HIGH	Property byte (number of short-circuit trips (SI))	—	ETU	PB	8	—
23335	0x5B27	LOW	Property byte (number of overload trips (L))	—	ETU	PB	8	—
23335	0x5B27	HIGH	Property byte (number of ground-fault tripping operations (G))	—	ETU	PB	8	—
23336	0x5B28	LOW	Property byte (total of deactivated I^2t values L1, L2, L3, N)	—	ETU	PB	8	—
23336	0x5B28	HIGH	Property byte (maintenance information about the main contacts)	—	ETU	PB	8	—
23337	0x5B29	-	Reserved	—	—	—	32	—

8.7.11 Register block RB 92 diagnostics data

The table below shows the content of register block 92 via which the data for detailed diagnostics of the SENTRON circuit breakers is transmitted.

The table below contains the register blocks RB 92: Diagnostics data (length 97 registers, read-only):

Table 8- 24 Content of register block 92

Register			Description	Data point	Source WL	Format	Length (bits)	Scaling
Address		High/Low						
dec	hex							
23553	0x5C01	LOW	Device status 1 (identical standard diagnostics)	—	COM16	DP standard	8	—
23553	0x5C01	HIGH	Device status 2 (identical standard diagnostics)	—	COM16	DP standard	8	—
23554	0x5C02	LOW	Device status 3 (identical standard diagnostics)	—	COM16	DP standard	8	—
23554	0x5C02	HIGH	Address of the class 1 master	—	COM16	unsigned char	8	0
23555	0x5C03	-	SENTRON identification number (0x80C0)	—	COM16	hex	16	—
23556	0x5C04	LOW	Fixed value 0x42	—	COM16	hex	8	—
23556	0x5C04	HIGH	External diagnostics bit; 1 = diagnosis; 0 = no diagnosis	—	COM16	hex	1	—
23557	0x5C05	-	Fixed header; value 0x05 82 00 00 00	—	COM16	hex	40	—
23559	0x5C07	HIGH	Reserved	—	—	unsigned char	8	—
23560	0x5C08	-	Diagnostic messages	—	COM16	Diagnostics	16	—
23562	0x5C0A	-	Module affected by diagnostics	—	COM16	Format (88)	32	—
23563	0x5C0B	-	Modules connected to the CubicleBUS	88	COM16	Format (88)	32	—
23565	0x5C0D	-	Currently pending alarms	402	ETU	Format (402)	16	—
23566	0x5C0E	LOW	Last unacknowledged tripping operation of the trip unit	401	ETU	Format (401)	8	—
23566	0x5C0E	HIGH	Reserved	—	—	unsigned char	8	—
23567	0x5C0F	-	Tripping operations by metering function/metering function PLUS	307	Meter. fct.	Format (307)	16	—
23568	0x5C10	-	Threshold warnings	308	Meter. fct.	Format (308)	32	—
23570	0x5C12	-	Current at the moment of shutdown	403	ETU	unsigned int	16	1

Register			Description	Data point	Source WL	Format	Length (bits)	Scaling
Address		High/Low						
dec	hex							
23571	0x5C13	LOW	Phase at the moment of shutdown	404	ETU	Format (373)	3	—
23571	0x5C13	HIGH	Position of the circuit breaker in the frame	24	COM16	Format (24)	4	—
23572	0x5C14	-	Reserved	—	—	unsigned char	16	—
23573	0x5C15	LOW	Status of the circuit breaker (on/off/powered, etc.)	328	BSS	Format (328)	8	—
23573	0x5C15	HIGH	Reserved	—	—	unsigned char	8	—
23574	0x5C16	-	Event log of the last 10 events with time	16	COM16	Format (16)	960	—
23634	0x5C52	-	Reserved	—	—	unsigned char	144	—
23643	0x5C5B	LOW	Property byte (modules connected to the CubicleBUS)	—	COM16	PB	8	—
23643	0x5C5B	HIGH	Property byte (currently pending alarms)	—	ETU	PB	8	—
23644	0x5C5C	LOW	Property byte (last unacknowledged tripping operation of the trip unit)	—	ETU	PB	8	—
23644	0x5C5C	HIGH	Property byte (tripping operations by metering function/metering function PLUS)	—	Meter. fct.	PB	8	—
23645	0x5C5D	LOW	Property byte (threshold warnings)	—	Meter. fct.	PB	8	—
23645	0x5C5D	HIGH	Property byte (current at the moment of shutdown)	—	ETU	PB	8	—
23646	0x5C5E	LOW	Property byte (phase at the moment of shutdown)	—	ETU	PB	8	—
23646	0x5C5E	HIGH	Property byte (position of the circuit breaker in the frame)	—	COM16	PB	8	—
23647	0x5C5F	LOW	Reserved	—	—	unsigned char	8	—
23647	0x5C5F	HIGH	Property byte (status of the circuit breaker (on/off/powered, etc.))	—	BSS	PB	8	—
23648	0x5C60	LOW	Property byte (event log of the last 10 events with time)	—	COM16	PB	8	—
23648	0x5C60	-	Reserved	—	—	unsigned char	24	—

8.7.12 Register block RB 93 control of the circuit breakers

The table below shows register block RB 93 via which the SENTRON circuit breakers are switched on, the min./max. buffer deleted, the outputs of the digital output modules forced, and the 6 available Modbus RTU bits (can be output via the configurable digital output module) set.

The table below contains the register blocks RB 93: Controlling the circuit breakers (length 14 registers, write-only):

Table 8- 25 Content of register block 93

Register			Description	Data point	Source WL	Format	Length (bits)	Scaling
Address		High/Low						
dec	hex							
23809	0x5D01	-	Header; value 0x00 00 00 00	—	COM16	—	32	—
23811	0x5D03	-	Controls the trip unit	406	ETU	Format (406)	16	—
23812	0x5D04	-	Reserved	—	—	unsigned char	16	—
23813	0x5D05	LOW	Controls the digital output module 1	121	DO1	Format (121)	8	—
23813	0x5D05	HIGH	Controls the digital output module 2	126	DO2	Format (121)	8	—
23814	0x5D06	LOW	Controls the buffers (e.g. min./max. values) of the communication module	18	COM16	Format (18)	8	—
23814	0x5D06	HIGH	Controls the outputs of the communication module (e.g. switching the breaker)	19	COM16	Format (19)	8	—
23815	0x5D07	LOW	Reserved	—	—	unsigned char	8	—
23815	0x5D07	HIGH	6 communication module bits for the digital configurable output module	426	COM16	Format (426)	6	—
23816	0x5D08	-	Reserved	—	—	unsigned char	40	—
23818	0x5D0A	HIGH	Property byte (6 communication module bits for the digital configurable output module)	—	COM16	PB	8	—
23819	0x5D0B	LOW	Property byte (controls the trip unit)	—	ETU	PB	8	—
23819	0x5D0B	HIGH	Property byte (reserved)	—	Meter. fct.	PB	8	—
23820	0x5D0C	LOW	Property byte (controls the digital output module 1)	—	DO1	PB	8	—
23820	0x5D0C	HIGH	Property byte (controls the digital output module 2)	—	DO2	PB	8	—
23821	0x5D0D	LOW	Property byte (controls the buffers (e.g. min./max. values) of the communication module)	—	COM16	PB	8	—

Register			Description	Data point	Source WL	Format	Length (bits)	Scaling
Address		High/Low						
dec	hex							
23821	0x5D0D	HIGH	Property byte (controls the outputs of the communication module (e.g. switching the breaker))	—	COM16	PB	8	—
23822	0x5D0E	LOW	Reserved	—	—	unsigned c har	8	—

8.7.13 Register block RB 94 current measured values

The table below shows register block 94 in which all current measured values are transmitted. The additional property bytes provide information on the availability and correctness of the measured values.

The table below contains the register blocks RB 94; current measured values (length 99 registers, read-only):

Table 8- 26 Content of register block 94

Register			Description	Data point	Source WL	Format	Length (bits)	Scaling
Address		High/Low						
dec	hex							
24065	0x5E01	LOW	Phase unbalance current (as %)	172	Meter. fct.	unsigned char	8	0
24065	0x5E01	HIGH	Reserved	—	—	unsigned char	8	—
24066	0x5E02	-	Long-time mean value of 3-phase current	193	Meter. fct.	unsigned int	16	0
24067	0x5E03	-	Long-time mean value of current L1	194	Meter. fct.	unsigned int	16	0
24068	0x5E04	-	Long-time mean value of current L2	195	Meter. fct.	unsigned int	16	0
24069	0x5E05	-	Long-time mean value of current L3	196	Meter. fct.	unsigned int	16	0
24070	0x5E06	-	Current in phase L1	380	ETU	unsigned int	16	0
24071	0x5E07	-	Current in phase L2	381	ETU	unsigned int	16	0
24072	0x5E08	-	Current in phase L3	382	ETU	unsigned int	16	0
24073	0x5E09	-	Mean current value over the three phases	383	ETU	unsigned int	16	0
24074	0x5E0A	-	Current in neutral conductor	375	ETU	unsigned int	16	0
24075	0x5E0B	-	Current which flows to ground	376	ETU	unsigned int	16	0
24076	0x5E0C	LOW	Phase unbalance voltage (in %)	173	Meter. fct.	unsigned char	8	0
24076	0x5E0C	HIGH	Reserved	—	—	—	8	—
24077	0x5E0D	-	Phase-to-phase voltage between phase L1 and L2	197	Meter. fct.	unsigned int	16	0
24078	0x5E0E	-	Phase-to-phase voltage between phase L2 and L3	198	Meter. fct.	unsigned int	16	0
24079	0x5E0F	-	Phase-to-phase voltage between phase L3 and L1	199	Meter. fct.	unsigned int	16	0
24080	0x5E10	-	Neutral point voltage phase L1	200	Meter. fct.	unsigned int	16	0

Register			Description	Data point	Source WL	Format	Length (bits)	Scaling
Address		High/Low						
dec	hex							
24081	0x5E11	-	Neutral point voltage phase L2	201	Meter. fct.	unsigned int	16	0
24082	0x5E12	-	Neutral point voltage phase L3	202	Meter. fct.	unsigned int	16	0
24083	0x5E13	-	Mean value of phase-to-phase voltage	203	Meter. fct.	unsigned int	16	0
24084	0x5E14	-	Mean value of neutral-point star voltage	204	Meter. fct.	unsigned int	16	0
24085	0x5E15	-	Total apparent power	217	Meter. fct.	unsigned int	16	0
24086	0x5E16	-	Total active power	221	Meter. fct.	signed int	16	0
24087	0x5E17	-	Active power in phase L1	222	Meter. fct.	signed int	16	0
24088	0x5E18	-	Active power in phase L2	223	Meter. fct.	signed int	16	0
24089	0x5E19	-	Active power in phase L3	224	Meter. fct.	signed int	16	0
24090	0x5E1A	-	Total reactive power	225	Meter. fct.	signed int	16	0
24091	0x5E1B	-	Long-time mean value of 3-phase active power	229	Meter. fct.	signed int	16	0
24092	0x5E1C	-	Long-time mean value of active power in phase L1	230	Meter. fct.	signed int	16	0
24093	0x5E1D	-	Long-time mean value of active power in phase L2	231	Meter. fct.	signed int	16	0
24094	0x5E1E	-	Long-time mean value of active power in phase L3	232	Meter. fct.	signed int	16	0
24095	0x5E1F	-	Long-time mean value of 3-phase apparent power	233	Meter. fct.	unsigned int	16	0
24096	0x5E20	-	Apparent power in phase L1	218	Meter. fct.	unsigned int	16	0
24097	0x5E21	-	Apparent power in phase L2	219	Meter. fct.	unsigned int	16	0
24098	0x5E22	-	Apparent power in phase L3	220	Meter. fct.	unsigned int	16	0
24099	0x5E23	-	Long-time mean value of apparent power in phase L1	234	Meter. fct.	unsigned int	16	0
24100	0x5E24	-	Long-time mean value of apparent power in phase L2	235	Meter. fct.	unsigned int	16	0
24101	0x5E25	-	Long-time mean value of apparent power in phase L3	236	Meter. fct.	unsigned int	16	0
24102	0x5E26	-	Long-time mean value of 3-phase reactive power	237	Meter. fct.	signed int	16	0
24103	0x5E27	-	Reactive power in phase L1	226	Meter. fct.	signed int	16	0
24104	0x5E28	-	Reactive power in phase L2	227	Meter. fct.	signed int	16	0
24105	0x5E29	-	Reactive power in phase L3	228	Meter. fct.	signed int	16	0
24106	0x5E2A	-	Active energy in normal direction [MWh]	238	Meter. fct.	unsigned long	32	0

Register			Description	Data point	Source WL	Format	Length (bits)	Scaling
Address		High/Low						
dec	hex							
24108	0x5E2C	-	Active energy in reverse direction [MWh]	239	Meter. fct.	unsigned long	32	0
24110	0x5E2E	-	Reactive energy in normal direction [MVArh]	240	Meter. fct.	unsigned long	32	0
24112	0x5E30	-	Reactive energy in reverse direction [MVArh]	241	Meter. fct.	unsigned long	32	0
24114	0x5E32	-	Mean value of the power factor	168	Meter. fct.	signed int	16	–3
24115	0x5E33	-	Power factor in phase L1	169	Meter. fct.	signed int	16	–3
24116	0x5E34	-	Power factor in phase L2	170	Meter. fct.	signed int	16	–3
24117	0x5E35	-	Power factor in phase L3	171	Meter. fct.	signed int	16	–3
24118	0x5E36	-	Frequency	262	Meter. fct.	unsigned int	16	–2
24119	0x5E37	LOW	THD of current	254	Meter. fct.	unsigned char	8	0
24119	0x5E37	HIGH	THD of voltage	257	Meter. fct.	unsigned char	8	0
24120	0x5E38	LOW	Form factor	261	Meter. fct.	unsigned char	8	–1
24120	0x5E38	HIGH	Peak factor	260	Meter. fct.	unsigned char	8	–1
24121	0x5E39	-	Frequency 3VL	396	—	unsigned char	16	-2
24122	0x5E3A	LOW	Temperature in the control cabinet (measured in the COM16)	71	COM16	unsigned char	8	0
24122	0x5E3A	HIGH	Temperature in circuit breaker (measured in the BSS)	330	BSS	unsigned char	8	0
24123	0x5E3B	-	Active energy in normal direction [kWh]	433	Meter. fct.	unsigned long	32	—
24125	0x5E3D	-	Active energy in reverse direction [kWh]	434	Meter. fct.	unsigned long	32	—
24127	0x5E3F	-	Reactive energy in normal direction [kVArh]	435	Meter. fct.	unsigned long	32	—
24129	0x5E41	-	Reactive energy in reverse direction [kVArh]	436	Meter. fct.	unsigned long	32	—
24131	0x5E43	-	Reserved	—	—	unsigned char	32	—
24133	0x5E45	LOW	Property byte (active energy in normal direction)	—	Meter. fct.	PB	8	—
24133	0x5E45	HIGH	Property byte (active energy in reverse direction)	—	Meter. fct.	PB	8	—
24134	0x5E46	LOW	Property byte (reactive energy in normal direction)	—	Meter. fct.	PB	8	—
24134	0x5E46	HIGH	Property byte (reactive energy in reverse direction)	—	Meter. fct.	PB	8	—

Register			Description	Data point	Source WL	Format	Length (bits)	Scaling
Address		High/Low						
dec	hex							
24135	0x5E47	LOW	Property byte (phase unbalance current (as %))	—	Meter. fct.	PB	8	—
24135	0x5E47	HIGH	Property byte (long-time mean value of 3-phase current)	—	Meter. fct.	PB	8	—
24136	0x5E48	LOW	Property byte (long-time mean value of current L1)	—	Meter. fct.	PB	8	—
24136	0x5E48	HIGH	Property byte (long-time mean value of current L2)	—	Meter. fct.	PB	8	—
24137	0x5E49	LOW	Property byte (long-time mean value of current L3)	—	Meter. fct.	PB	8	—
24137	0x5E49	HIGH	Property byte (current in phase L1)	—	ETU	PB	8	—
24138	0x5E4A	LOW	Property byte (current in phase L2)	—	ETU	PB	8	—
24138	0x5E4A	HIGH	Property byte (current in phase L3)	—	ETU	PB	8	—
24139	0x5E4B	LOW	Property byte (mean current value over the three phases)	—	ETU	PB	8	—
24139	0x5E4B	HIGH	Property byte (current in neutral conductor)	—	ETU	PB	8	—
24140	0x5E4C	LOW	Property byte (current which flows to ground)	—	ETU	PB	8	—
24140	0x5E4C	HIGH	Property byte (phase unbalance voltage (in %))	—	Meter. fct.	PB	8	—
24141	0x5E4D	LOW	Property byte (phase-to-phase voltage between phase L1 and L2)	—	Meter. fct.	PB	8	—
24141	0x5E4D	HIGH	Property byte (phase-to-phase voltage between phase L2 and L3)	—	Meter. fct.	PB	8	—
24142	0x5E4E	LOW	Property byte (phase-to-phase voltage between phase L3 and L1)	—	Meter. fct.	PB	8	—
24142	0x5E4E	HIGH	Property byte (neutral point voltage phase L1)	—	Meter. fct.	PB	8	—
24143	0x5E4F	LOW	Property byte (neutral point voltage phase L2)	—	Meter. fct.	PB	8	—
24143	0x5E4F	HIGH	Property byte (neutral point voltage phase L3)	—	Meter. fct.	PB	8	—
24144	0x5E50	LOW	Property byte (mean value of phase-to-phase voltage)	—	Meter. fct.	PB	8	—
24144	0x5E50	HIGH	Property byte (mean value of neutral point voltage)	—	Meter. fct.	PB	8	—
24145	0x5E51	LOW	Property byte (total apparent power)	—	Meter. fct.	PB	8	—
24145	0x5E51	HIGH	Property byte (total active power)	—	Meter. fct.	PB	8	—
24146	0x5E52	LOW	Property byte (active power in phase L1)	—	Meter. fct.	PB	8	—
24146	0x5E52	HIGH	Property byte (active power in phase L2)	—	Meter. fct.	PB	8	—

Register			Description	Data point	Source WL	Format	Length (bits)	Scaling
Address		High/Low						
dec	hex							
24147	0x5E53	LOW	Property byte (active power in phase L3)	—	Meter. fct.	PB	8	—
24147	0x5E53	HIGH	Property byte (total reactive power)	—	Meter. fct.	PB	8	—
24148	0x5E54	LOW	Property byte (long-time mean value of 3-phase active power)	—	Meter. fct.	PB	8	—
24148	0x5E54	HIGH	Property byte (long-time mean value of active power in phase L1)	—	Meter. fct.	PB	8	—
24149	0x5E55	LOW	Property byte (long-time mean value of active power in phase L2)	—	Meter. fct.	PB	8	—
24149	0x5E55	HIGH	Property byte (long-time mean value of active power in phase L3)	—	Meter. fct.	PB	8	—
24150	0x5E56	LOW	Property byte (long-time mean value of 3-phase apparent power)	—	Meter. fct.	PB	8	—
24150	0x5E56	HIGH	Property byte (apparent power in phase L1)	—	Meter. fct.	PB	8	—
24151	0x5E57	LOW	Property byte (apparent power in phase L2)	—	Meter. fct.	PB	8	—
24151	0x5E57	HIGH	Property byte (apparent power in phase L3)	—	Meter. fct.	PB	8	—
24152	0x5E58	LOW	Property byte (long-time mean value of apparent power in phase L1)	—	Meter. fct.	PB	8	—
24152	0x5E58	HIGH	Property byte (long-time mean value of apparent power in phase L2)	—	Meter. fct.	PB	8	—
24153	0x5E59	LOW	Property byte (long-time mean value of apparent power in phase L3)	—	Meter. fct.	PB	8	—
24153	0x5E59	HIGH	Property byte (long-time mean value of 3-phase reactive power)	—	Meter. fct.	PB	8	—
24154	0x5E5A	LOW	Property byte (reactive power in phase L1)	—	Meter. fct.	PB	8	—
24154	0x5E5A	HIGH	Property byte (reactive power in phase L2)	—	Meter. fct.	PB	8	—
24155	0x5E5B	LOW	Property byte (reactive power in phase L3)	—	Meter. fct.	PB	8	—
24155	0x5E5B	HIGH	Property byte (active energy in normal direction)	—	Meter. fct.	PB	8	—
24156	0x5E5C	LOW	Property byte (active energy in reverse direction)	—	Meter. fct.	PB	8	—
24156	0x5E5C	HIGH	Property byte (reactive energy in normal direction)	—	Meter. fct.	PB	8	—
24157	0x5E5D	LOW	Property byte (reactive energy in reverse direction)	—	Meter. fct.	PB	8	—
24157	0x5E5D	HIGH	Property byte (mean value of the power factor)	—	Meter. fct.	PB	8	—
24158	0x5E5E	LOW	Property byte (power factor in phase L1)	—	Meter. fct.	PB	8	—

Register			Description	Data point	Source WL	Format	Length (bits)	Scaling
Address		High/Low						
dec	hex							
24158	0x5E5E	HIGH	Property byte (power factor in phase L2)	—	Meter. fct.	PB	8	—
24159	0x5E5F	LOW	Property byte (power factor in phase L3)	—	Meter. fct.	PB	8	—
24159	0x5E5F	HIGH	Property byte (frequency)	—	Meter. fct.	PB	8	—

8.7.14 Register block RB 97 Detailed identification

The table below shows register block 97 via which all necessary information for precise identification of the SENTRON circuit breakers can be retained.

The table below contains the register blocks RB 97: Detailed identification (length 112 registers, read-only):

Table 8- 27 Content of register block 97

Register			Description	Data point	Source WL	Format	Length (bits)	Scaling
Address		High/Low						
dec	hex							
24833	0x6101	-	Order number of the trip unit	407	ETU	16 x char	144	—
24842	0x610A	-	Date of manufacture of trip unit	408	ETU	Time	64	—
24846	0x610E	-	Identification number of trip unit	409	ETU	17 x char	136	—
24854	0x6116	HIGH	Reserved	—	—	—	8	—
24855	0x6117	LOW	Ground fault transformer detection type	410	ETU	Format (410)	2	—
24855	0x6117	HIGH	N transformer connected	411	ETU	Format (411)	1	—
24856	0x6118	LOW	Reserved	—	—	—	8	—
24856	0x6118	HIGH	Market in which the trip unit is used	95	ETU	Format (95)	2	—
24857	0x6119	-	Identification number of circuit breaker	96	ETU	20 x char	160	—
24867	0x6123	-	Reserved	—	—	—	48	—
24870	0x6126	-	Test date of switch	98	ETU	Time	64	—
24874	0x612A	LOW	Switching capacity class	99	ETU	Format (99)	4	—
24874	0x612A	HIGH	Size	100	ETU	Format (100)	2	—
24875	0x612B	-	Rated voltage (LL) of the circuit breaker	101	ETU	unsigned int	16	0
24876	0x612C	-	Rated current of the external g transformer	102	ETU	unsigned int	16	0
24877	0x612D	-	Order number of the circuit breaker (trip unit VL)	103	ETU	Format (103)	160	—
24887	0x6137	-	Reserved	—	—	—	144	—
24896	0x6140	-	Order number of the trip unit	371	ETU	18 x char	144	—
24905	0x6149	LOW	Number of poles of circuit breaker	108	ETU	Format (108)	3	—
24905	0x6149	HIGH	Reserved	—	—	—	8	—
24906	0x614A	-	Rating plug	377	ETU	unsigned int	16	0
24907	0x614B	-	Circuit breaker frame	378	ETU	unsigned int	16	0
24908	0x614C	-	Reserved	—	—	—	400	—
24933	0x6165	LOW	Property byte (order number of the trip unit)	—	ETU	PB	8	—

Register			Description	Data point	Source WL	Format	Length (bits)	Scaling
Address		High/Low						
dec	hex							
24933	0x6165	HIGH	Property byte (date of manufacture of trip unit)	—	ETU	PB	8	—
24934	0x6166	LOW	Property byte (identification number of trip unit)	—	ETU	PB	8	—
24934	0x6166	HIGH	Property byte (ground fault transformer detection method)	—	ETU	PB	8	—
24935	0x6167	LOW	Property byte (N transformer connected)	—	ETU	PB	8	—
24935	0x6167	HIGH	Reserved	—	—	—	8	—
24936	0x6168	LOW	Property byte (market in which the trip unit is used)	—	ETU	PB	8	—
24936	0x6168	HIGH	Property byte (identification number of circuit breaker)	—	ETU	PB	8	—
24937	0x6169	LOW	Reserved	—	—	—	8	—
24937	0x6169	HIGH	Property byte (test date for switch)	—	ETU	PB	8	—
24938	0x616A	LOW	Property byte (switching capacity class)	—	ETU	PB	8	—
24938	0x616A	HIGH	Property byte (size)	—	ETU	PB	8	—
24939	0x616B	LOW	Property byte (rated voltage (LL) of the circuit breaker)	—	ETU	PB	8	—
24939	0x616B	HIGH	Property byte (rated current of the external g transformer)	—	ETU	PB	8	—
24940	0x616C	LOW	Property byte (order number of the circuit breaker (trip unit VL))	—	ETU	PB	8	—
24940	0x616C	HIGH	Reserved	—	—	—	8	—
24941	0x616D	LOW	Property byte (order number of the trip unit)	—	ETU	PB	8	—
24941	0x616D	HIGH	Property byte (number of poles of circuit breaker)	—	ETU	PB	8	—
24942	0x616E	LOW	Property byte (rating plug)	—	ETU	PB	8	—
24942	0x616E	HIGH	Property byte (circuit breaker frame)	—	ETU	PB	8	—
24943	0x616F	LOW	Reserved	—	—	—	8	—
24943	0x616F		Reserved	—	—	PB	16	—

8.7.15 Register block RB 100 Identification in overview

The table below shows register block 100 that contains the identification of the relevant switch (test data, manufacturer, device name or family, device class, etc.).

The table below contains the register blocks RB 100: Identification overview (length 50 registers, read-only):

Table 8- 28 Content of register block 100

Register			Description	Data point	Source WL	Format	Length (bits)	Scaling
Address		High/Low						
dec	hex							
25601	0x6401	-	Header; value 0x00 00 00 00	—	COM16	—	32	—
25603	0x6403	-	Test date of switch	—	ETU	Time	64	—
25607	0x6407	-	Manufacturer (SIEMENS or SE&A)	—	COM16	20 x char	160	—
25617	0x6411	-	Device name (SENTRON WL or SENTRON VL)	—	COM16	24 x char	192	—
25629	0x641D	LOW	Device family (fixed value 0x03)	—	COM16	hex	8	—
25629	0x641D	HIGH	Device bus family (fixed value 0x01)	—	COM16	hex	8	—
25630	0x641E	LOW	Device class (1 = air circuit breaker; 2 = compact circuit breaker)	—	COM16	hex	8	—
25630	0x641E	HIGH	System (fixed value 0x06)	—	COM16	hex	8	—
25631	0x641F	LOW	Function group (Bit .0 for COM16; bit .4 for COM11)	—	COM16	hex	8	—
25631	0x641F	HIGH	Reserved	—	—	—	8	—
25632	0x6420	-	Abbreviated designation (PCB or MCCB)	—	COM16	16 x char	128	—
25640	0x6428	-	HW version	—	COM16	4 x char	32	—
25642	0x642A	-	Modbus identification number (0x00 00 80 C0)	—	COM16	hex	32	—
25644	0x642C	-	Reserved	—	—	—	16	—
25645	0x642D	-	Service number (lower part of switch identification number)	—	COM16	8 x char	64	—
25649	0x6431	-	Firmware version of Modbus module	—	COM16	4 x char	32	—

8.7.16 Register block RB 128 parameters of the metering function and extended protection function

The table below shows register block 128 via which the parameters of the metering function and the extended protection function can be read out but also set. It also contains the assignments of the configurable digital output module.

The table below contains the register blocks RB 128: Parameters of the metering function and the extended protection function (length 52 registers, read/write):

Table 8- 29 Content of register block 128

Register			Description	Data point	Source WL	Format	Length (bits)	Scaling
Address		High/Low						
dec	hex							
32769	0x8001	-	Header; value 0x00 00 00 00	—	COM16	—	32	—
32771	0x8003	LOW	The voltage transformer can be star or delta-connected on the primary side	162	Meter. fct.	Format (162)	1	—
32771	0x8003	HIGH	Reserved	—	—	—	8	—
32772	0x8004	-	Rated voltage of the system (on the primary side)	164	Meter. fct.	unsigned int	16	0
32773	0x8005	LOW	Secondary voltage of transformer	165	Meter. fct.	unsigned char	8	0
32773	0x8005	HIGH	Length of period for calculating long-time mean value	166	Meter. fct.	unsigned char	8	0
32774	0x8006	LOW	Number of sub-periods for calculating long-time mean value	167	Meter. fct.	unsigned char	8	0
32774	0x8006	HIGH	Reserved	—	—	—	8	—
32775	0x8007	-	Lower limit of power transmission	372	ETU	unsigned int	16	0
32776	0x8008	-	Active power in normal direction	141	Meter. fct.	unsigned int	16	0
32777	0x8009	-	Active power in reverse direction	143	Meter. fct.	unsigned int	16	0
32778	0x800A	LOW	Delay time for active power in normal direction	142	Meter. fct.	unsigned char	8	0
32778	0x800A	HIGH	Delay time for active power in reverse direction	144	Meter. fct.	unsigned char	8	0
32779	0x800B	LOW	Normal direction of incoming supply	145	Meter. fct.	Format (145)	1	—
32779	0x800B	HIGH	Direction of rotation of phase	146	Meter. fct.	Format (146)	1	—
32780	0x800C	-	Underfrequency	147	Meter. fct.	unsigned int	16	0
32781	0x800D	LOW	Delay time for overfrequency	150	Meter. fct.	unsigned char	8	0
32781	0x800D	HIGH	Delay time for underfrequency	148	Meter. fct.	unsigned char	8	0

Register			Description	Data point	Source WL	Format	Length (bits)	Scaling
Address		High/Low						
dec	hex							
32782	0x800E	-	Overfrequency	149	Meter. fct.	unsigned int	16	0
32783	0x800F	LOW	THD of current	158	Meter. fct.	unsigned char	8	0
32783	0x800F	HIGH	Delay time of THD of current	159	Meter. fct.	unsigned char	8	0
32784	0x8010	LOW	THD of voltage	160	Meter. fct.	unsigned char	8	0
32784	0x8010	HIGH	Delay time of THD of voltage	161	Meter. fct.	unsigned char	8	0
32785	0x8011	LOW	Voltage unbalance	151	Meter. fct.	unsigned char	8	0
32785	0x8011	HIGH	Delay time for voltage unbalance	152	Meter. fct.	unsigned char	8	0
32786	0x8012	-	Undervoltage	153	Meter. fct.	unsigned int	16	0
32787	0x8013	-	Overvoltage	155	Meter. fct.	unsigned int	16	0
32788	0x8014	LOW	Delay time for undervoltage	154	Meter. fct.	unsigned char	8	0
32788	0x8014	HIGH	Delay time for overvoltage	156	Meter. fct.	unsigned char	8	0
32789	0x8015	LOW	Reserved	—	—	—	8	—
32789	0x8015	HIGH	Current unbalance	139	Meter. fct.	unsigned char	8	0
32790	0x8016	LOW	Delay time for current unbalance	140	Meter. fct.	unsigned char	8	0
32790	0x8016	HIGH	Reserved	—	—	—	8	—
32791	0x8017	-	Reserved	—	—	—	16	0
32792	0x8018	-	Assignment of config. dig. output module	129	conf. DO	Format (129)	168	—
32802	0x8022	-	Reserved	—	—	—	24	—
32804	0x8024	LOW	Property byte (voltage transformer can be star or delta-connected on the primary side)	—	Meter. fct.	PB	8	—
32804	0x8024	HIGH	Reserved	—	—	—	8	—
32805	0x8025	LOW	Property byte (rated voltage of the system (on the primary side))	—	Meter. fct.	PB	8	—
32805	0x8025	HIGH	Property byte (secondary voltage of transformer)	—	Meter. fct.	PB	8	—
32806	0x8026	LOW	Property byte (length of period for calculating long-time mean value)	—	Meter. fct.	PB	8	—
32806	0x8026	HIGH	Property byte (number of sub-periods for calculating long-time mean value)	—	Meter. fct.	PB	8	—

Register			Description	Data point	Source WL	Format	Length (bits)	Scaling
Address		High/Low						
dec	hex							
32807	0x8027	LOW	Reserved	—	—	—	8	—
32807	0x8027	HIGH	Property byte 2 (lower limit of power transmission)	—	ETU	PB	8	—
32808	0x8028	LOW	Property byte (active power in normal direction)	—	Meter. fct.	PB	8	—
32808	0x8028	HIGH	Property byte (active power in reverse direction)	—	Meter. fct.	PB	8	—
32809	0x8029	LOW	Property byte (delay time for active power in normal direction)	—	Meter. fct.	PB	8	—
32809	0x8029	HIGH	Property byte (delay time for active power in reverse direction)	—	Meter. fct.	PB	8	—
32810	0x802A	LOW	Property byte (normal direction of incoming supply)	—	Meter. fct.	PB	8	—
32810	0x802A	HIGH	Property byte (direction of rotation of phase)	—	Meter. fct.	PB	8	—
32811	0x802B	LOW	Property byte (underfrequency)	—	Meter. fct.	PB	8	—
32811	0x802B	HIGH	Property byte (delay time for overfrequency)	—	Meter. fct.	PB	8	—
32812	0x802C	LOW	Property byte (delay time for underfrequency)	—	Meter. fct.	PB	8	—
32812	0x802C	HIGH	Property byte (overfrequency)	—	Meter. fct.	PB	8	—
32813	0x802D	LOW	Property byte (THD of current)	—	Meter. fct.	PB	8	—
32813	0x802D	HIGH	Property byte (delay time of THD of current)	—	Meter. fct.	PB	8	—
32814	0x802E	LOW	Property byte (THD of voltage)	—	Meter. fct.	PB	8	—
32814	0x802E	HIGH	Property byte (delay time of THD of voltage)	—	Meter. fct.	PB	8	—
32815	0x802F	LOW	Property byte (voltage unbalance)	—	Meter. fct.	PB	8	—
32815	0x802F	HIGH	Property byte (delay time for voltage unbalance)	—	Meter. fct.	PB	8	—
32816	0x8030	LOW	Property byte (undervoltage)	—	Meter. fct.	PB	8	—
32816	0x8030	HIGH	Property byte (overvoltage)	—	Meter. fct.	PB	8	—
32817	0x8031	LOW	Property byte (delay time for undervoltage)	—	Meter. fct.	PB	8	—
32817	0x8031	HIGH	Property byte (delay time for overvoltage)	—	Meter. fct.	PB	8	—
32818	0x8032	LOW	Property byte (reserved)	—	Meter. fct.	PB	8	—
32818	0x8032	HIGH	Property byte (current unbalance)	—	Meter. fct.	PB	8	—
32819	0x8033	LOW	Property byte (delay time for current unbalance)	—	Meter. fct.	PB	8	—
32819	0x8033	HIGH	Reserved	—	—	PB	8	—
32820	0x8034	LOW	Property byte (assignment of config. dig. output module)	—	conf. DO	PB	8	—

8.7.17 Register block RB 129 parameters of the protection function and settings for load shedding and load pick up

The table below shows RB 129 that contains the parameters (overload protection, time-lag class, short-circuit protection, thermal memory, phase loss sensitivity, etc.) of the protection function, and the settings for load shedding and load pick up.

The table below shows RB 129 that contains the parameters of the protection function, and the settings for load shedding and load pick up:

Table 8- 30 Content of register block 129

Register			Description	Data point	Source WL	Format	Length (bits)	Scaling
Address		High/Low						
dec	hex							
33025	0x8101	-	Header; value 0x00 00 00 00	—	COM16	—	32	—
33027	0x8103	-	Overload parameter I_R parameter set A (PS A)	333	ETU	unsigned int	16	0
33028	0x8104	-	Overload protection neutral conductor I_N PS A (WL)	334	ETU	unsigned int	16	0
33029	0x8105	-	Time-lag class t_R PS A	335	ETU	unsigned int	16	–1
33030	0x8106	-	Short-circuit protection instantaneous I_i PS A	336	ETU	unsigned int	16	1
33031	0x8107	-	Short-circuit protection delayed I_{sd} PS A	337	ETU	unsigned int	16	1
33032	0x8108	-	Delay time for short-circuit protection t_{sd} PS A	338	ETU	unsigned int	16	–3
33033	0x8109	-	Ground-fault protection I_g PS A	339	ETU	unsigned int	16	0
33034	0x810A	-	Delay time for ground fault t_g PS A	340	ETU	unsigned int	16	–3
33035	0x810B	-	Ground fault alarm I_{g2} PS A	341	ETU	unsigned int	16	0
33036	0x810C	-	Delay time for ground fault alarm t_{g2} PS A	342	ETU	unsigned int	16	–3
33037	0x810D	LOW	I^2t characteristic for delayed short-circuit protection PS A	343	ETU	Format (343)	1	—
33037	0x810D	HIGH	I^2t characteristic for ground-fault protection PS A	344	ETU	Format (344)	1	—
33038	0x810E	LOW	I^4t characteristic for overload protection PS A	345	ETU	Format (345)	1	—
33038	0x810E	HIGH	Thermal memory PS A	346	ETU	Format (346)	1	—
33039	0x810F	LOW	Phase loss sensitivity PS A	347	ETU	Format (347)	1	—
33039	0x810F	HIGH	Reserved	—	—	—	8	—
33040	0x8110	-	Cooling time constant PS A	348	ETU	unsigned int	16	0

Register			Description	Data point	Source WL	Format	Length (bits)	Scaling
Address		High/Low						
dec	hex							
33041	0x8111	-	Overload parameter I_R parameter set B (PS B)	349	ETU	unsigned int	16	0
33042	0x8112	-	Overload protection neutral conductor I_N PS B	350	ETU	unsigned int	16	0
33043	0x8113	-	Time-lag class t_R PS B	351	ETU	unsigned int	16	–1
33044	0x8114	-	Short-circuit protection instantaneous I_i PS B	352	ETU	unsigned int	16	1
33045	0x8115	-	Short-circuit protection delayed I_{sd} PS B	353	ETU	unsigned int	16	1
33046	0x8116	-	Delay time for short-circuit protection t_{sd} PS B	354	ETU	unsigned int	16	–3
33047	0x8117	-	Ground-fault protection I_g PS B	355	ETU	unsigned int	16	0
33048	0x8118	-	Delay time for ground fault t_g PS B	356	ETU	unsigned int	16	–3
33049	0x8119	-	Ground-fault protection alarm I_{g2} PS B	357	ETU	unsigned int	16	0
33050	0x811A	-	Delay time for ground fault alarm t_{g2} PS B	358	ETU	unsigned int	16	–3
33051	0x811B	LOW	I^2t curve for delayed short-circuit protection PS B	359	ETU	Format (343)	1	—
33051	0x811B	HIGH	I^2t curve for ground-fault protection PS B	360	ETU	Format (344)	1	—
33052	0x811C	LOW	I^4t characteristic for overload protection PS B	361	ETU	Format (345)	1	—
33052	0x811C	HIGH	Thermal memory PS B	362	ETU	Format (346)	1	—
33053	0x811D	LOW	Phase loss sensitivity PS B	363	ETU	Format (347)	1	—
33053	0x811D	HIGH	Reserved	—	—	—	8	—
33054	0x811E	-	Cooling time constant PS B	364	ETU	unsigned int	16	0
33055	0x811F	-	Load shedding	367	ETU	unsigned int	16	0
33056	0x8120	-	Load pick up	368	ETU	unsigned int	16	0
33057	0x8121	LOW	Delay time for load shedding / pick up	366	ETU	unsigned char	8	0
33057	0x8121	HIGH	Active parameter set	370	ETU	Format (370)	1	—
33058	0x8122	-	Reserved	—	—	—	16	0
33059	0x8123	LOW	Reserved	—	—	—	8	0
33059	0x8123	HIGH	Ground fault transformer detection type	410	ETU	Format (410)	2	—

Register			Description	Data point	Source WL	Format	Length (bits)	Scaling
Address		High/Low						
dec	hex							
33060	0x8124	-	Rated current of the external g transformer	102	ETU	unsigned int	16	0
33061	0x8125	-	Reserved	331	—	—	208	—
33074	0x8132	LOW	Property byte (rated current of the external g transformer)	333	ETU	PB	8	—
33074	0x8132	HIGH	Reserved	—	—	—	8	—
33075	0x8133	LOW	Property byte (overload parameter I_R parameter set A (PS A))	335	ETU	PB	8	—
33075	0x8133	HIGH	Property byte (overload protection neutral conductor I_N PS A (WL))	336	ETU	PB	8	—
33076	0x8134	LOW	Property byte (time-lag class t_R PS A)	337	ETU	PB	8	—
33076	0x8134	HIGH	Property byte (short-circuit protection instantaneous I_i PS A)	338	ETU	PB	8	—
33077	0x8135	LOW	Property byte (short-circuit protection delayed I_{sd} PS A)	339	ETU	PB	8	—
33077	0x8135	HIGH	Property byte (delay time for short-circuit protection t_{sd} PS A)	340	ETU	PB	8	—
33078	0x8136	LOW	Property byte (ground-fault protection I_g PS A)	341	ETU	PB	8	—
33078	0x8136	HIGH	Property byte (delay time for ground fault t_g PS A)	342	ETU	PB	8	—
33079	0x8137	LOW	Property byte (ground-fault alarm I_{g2} PS A)	343	ETU	PB	8	—
33079	0x8137	HIGH	Property byte (delay time for ground fault alarm t_{g2} PS A)	344	ETU	PB	8	—
33080	0x8138	LOW	Property byte (I^2t characteristic for delayed short-circuit protection PS A)	345	ETU	PB	8	—
33080	0x8138	HIGH	Property byte (I^2t characteristic for ground-fault protection PS A)	346	ETU	PB	8	—
33081	0x8139	LOW	Property byte (I^4t characteristic for overload protection PS A)	347	ETU	PB	8	—
33081	0x8139	HIGH	Property byte (thermal memory PS A)	348	ETU	PB	8	—
33082	0x813A	LOW	Property byte (phase loss sensitivity PS A)	349	ETU	PB	8	—
33082	0x813A	HIGH	Property byte (cooling time constant PS A)	350	ETU	PB	8	—
33083	0x813B	LOW	Property byte (overload parameter I_R parameter set B (PS B))	351	ETU	PB	8	—
33083	0x813B	HIGH	Property byte (overload protection neutral conductor I_N PS B)	352	ETU	PB	8	—
33084	0x813C	LOW	Property byte (time-lag class t_R PS B)	353	ETU	PB	8	—

Register			Description	Data point	Source WL	Format	Length (bits)	Scaling
Address		High/Low						
dec	hex							
33084	0x813C	HIGH	Property byte (short-circuit protection instantaneous I_i PS B)	354	ETU	PB	8	—
33085	0x813D	LOW	Property byte (short-circuit protection delayed I_{sd} PS B)	355	ETU	PB	8	—
33085	0x813D	HIGH	Property byte (delay time for short-circuit protection t_{sd} PS B)	356	ETU	PB	8	—
33086	0x813E	LOW	Property byte (ground-fault protection I_g PS B)	357	ETU	PB	8	—
33086	0x813E	HIGH	Property byte (delay time for ground fault t_g PS B)	358	ETU	PB	8	—
33087	0x813F	LOW	Property byte (ground-fault alarm I_{g2} PS B)	359	ETU	PB	8	—
33087	0x813F	HIGH	Property byte (delay time for ground fault alarm t_{g2} PS B)	360	ETU	PB	8	—
33088	0x8140	LOW	Property byte (I^2t curve for delayed short-circuit protection PS B)	361	ETU	PB	8	—
33088	0x8140	HIGH	Property byte (I^2t characteristic for ground-fault protection PS B)	362	ETU	PB	8	—
33089	0x8141	LOW	Property byte (I^4t characteristic for overload protection PS B)	363	ETU	PB	8	—
33089	0x8141	HIGH	Property byte (thermal memory PS B)	364	ETU	PB	8	—
33090	0x8142	LOW	Property byte (phase loss sensitivity PS B)	367	ETU	PB	8	—
33090	0x8142	HIGH	Property byte (cooling time constant PS B)	368	ETU	PB	8	—
33091	0x8143	LOW	Property byte (load shedding)	366	ETU	PB	8	—
33091	0x8143	HIGH	Property byte (load pick up)	370	ETU	PB	8	—
33092	0x8144	LOW	Property byte (delay time for load shedding/pick up)	365	ETU	PB	8	—
33092	0x8144	HIGH	Property byte (active parameter set)	421	—	PB	8	—
33093	0x8145	—	Reserved	—	—	—	16	—
33094	0x8146	LOW	Property byte (time lag class (SENTRON VL LCD ETU40M only))	331	—	PB	8	—

8.7.18 Register block RB 131 switching the parameters for the extended protection function and the threshold values on and off

The table below shows RB 131 via whose property bytes the parameters of the protection function, the extended protection function, and the threshold parameters can be switched on and off.

The table below contains the register blocks RB 131: Parameters for switching the parameters for the extended protection function and the threshold values on and off (length 35 registers, read/write):

Table 8- 31 Content of register block 131

Register			Description	Data point	Source WL	Format	Length (bits)	Scaling
Address		High/Low						
dec	Hex							
33537	0x8301	-	Header; value 0x00 00 00 00	—	COM16	—	32	—
33539	0x8303	LOW	Property byte (overload parameter I_R parameter set A (PS A))	—	ETU	PB	8	—
33539	0x8303	HIGH	Property byte (overload protection neutral conductor I_N PS A (WL))	—	ETU	PB	8	—
33540	0x8304	LOW	Property byte (short-circuit protection instantaneous I_i PS A)	—	ETU	PB	8	—
33540	0x8304	HIGH	Property byte (short-circuit protection delayed I_{sd} PS A)	—	ETU	PB	8	—
33541	0x8305	LOW	Property byte (ground-fault protection I_g PS A)	—	ETU	PB	8	—
33541	0x8305	HIGH	Property byte (ground-fault alarm I_{g2} PS A)	—	ETU	PB	8	—
33542	0x8306	LOW	Property byte (overload parameter I_R parameter set B (PS B))	—	ETU	PB	8	—
33542	0x8306	HIGH	Property byte (overload protection neutral conductor I_N PS B)	—	ETU	PB	8	—
33543	0x8307	LOW	Property byte (short-circuit protection instantaneous I_i PS B)	—	ETU	PB	8	—
33543	0x8307	HIGH	Property byte (short-circuit protection delayed I_{sd} PS B)	—	ETU	PB	8	—
33544	0x8308	LOW	Property byte (ground-fault protection I_g PS B)	—	ETU	PB	8	—
33544	0x8308	HIGH	Property byte (ground-fault alarm I_{g2} PS B)	—	ETU	PB	8	—
33545	0x8309	LOW	Property byte (active power in normal direction)	—	Meter. fct.	PB	8	—
33545	0x8309	HIGH	Property byte (active power in reverse direction)	—	Meter. fct.	PB	8	—
33546	0x830A	LOW	Property byte (direction of rotation of phase)	—	Meter. fct.	PB	8	—
33546	0x830A	HIGH	Property byte (underfrequency)	—	Meter. fct.	PB	8	—
33547	0x830B	LOW	Property byte (overfrequency)	—	Meter. fct.	PB	8	—

Register			Description	Data point	Source WL	Format	Length (bits)	Scaling
Address		High/Low						
dec	Hex							
33547	0x830B	HIGH	Property byte (THD of current)	—	Meter. fct.	PB	8	—
33548	0x830C	LOW	Property byte (THD of current)	—	Meter. fct.	PB	8	—
33548	0x830C	HIGH	Property byte (voltage unbalance)	—	Meter. fct.	PB	8	—
33549	0x830D	LOW	Property byte (undervoltage)	—	Meter. fct.	PB	8	—
33549	0x830D	HIGH	Property byte (overvoltage)	—	Meter. fct.	PB	8	—
33550	0x830E	LOW	Property byte (current unbalance)	—	Meter. fct.	PB	8	—
33550	0x830E	HIGH	Property byte (active power in normal direction)	—	Meter. fct.	PB	8	—
33551	0x830F	LOW	Property byte (active power in reverse direction)	—	Meter. fct.	PB	8	—
33551	0x830F	HIGH	Property byte (capacitive power factor)	—	Meter. fct.	PB	8	—
33552	0x8310	LOW	Property byte (inductive power factor)	—	Meter. fct.	PB	8	—
33552	0x8310	HIGH	Property byte (overfrequency)	—	Meter. fct.	PB	8	—
33553	0x8311	LOW	Property byte (underfrequency)	—	Meter. fct.	PB	8	—
33553	0x8311	HIGH	Property byte (current THD)	—	Meter. fct.	PB	8	—
33554	0x8312	LOW	Property byte (voltage THD)	—	Meter. fct.	PB	8	—
33554	0x8312	HIGH	Property byte (peak factor)	—	Meter. fct.	PB	8	—
33555	0x8313	LOW	Property byte (form factor)	—	Meter. fct.	PB	8	—
33555	0x8313	HIGH	Property byte (long-time mean value for active power)	—	Meter. fct.	PB	8	—
33556	0x8314	LOW	Property byte (long-time mean value for apparent power)	—	Meter. fct.	PB	8	—
33556	0x8314	HIGH	Property byte (long-time mean value for reactive power)	—	Meter. fct.	PB	8	—
33557	0x8315	LOW	Property byte (reactive power in normal direction)	—	Meter. fct.	PB	8	—
33557	0x8315	HIGH	Property byte (reactive power in reverse direction)	—	Meter. fct.	PB	8	—
33558	0x8316	LOW	Property byte (apparent power)	—	Meter. fct.	PB	8	—
33558	0x8316	HIGH	Property byte (overcurrent)	—	Meter. fct.	PB	8	—
33559	0x8317	LOW	Property byte (current that flows to ground)	—	Meter. fct.	PB	8	—
33559	0x8317	HIGH	Property byte (overcurrent in neutral conductor)	—	Meter. fct.	PB	8	—
33560	0x8318	LOW	Property byte (long-time mean value of current)	—	Meter. fct.	PB	8	—
33560	0x8318	HIGH	Property byte (phase unbalance current)	—	Meter. fct.	PB	8	—
33561	0x8319	LOW	Property byte (undervoltage)	—	Meter. fct.	PB	8	—
33561	0x8319	HIGH	Property byte (phase unbalance voltage)	—	Meter. fct.	PB	8	—

Register			Description	Data point	Source WL	Format	Length (bits)	Scaling
Address		High/Low						
dec	Hex							
33562	0x831A	LOW	Property byte (overvoltage)	—	Meter. fct.	PB	8	—
33562	0x831A	HIGH	Reserved	—	—	—	8	—
33563	0x831B	LOW	Property byte (thermal memory PS A)	—	ETU	PB	8	—
33563	0x831B	HIGH	Reserved	—	—	—	8	—
33564	0x831C	LOW	Property byte (N transformer connected)	—	ETU	PB	8	—
33564	0x8301	-	Reserved	—	—	—	120	—

8.7.19 Register block RB 130 parameters for the threshold values

The table below shows RB 130 via which the parameters for generating threshold warnings can be read out and modified.

The table contains the register blocks RB 130: Parameters for the threshold values (length 74 registers, read/write) Part 1:

Table 8- 32 Content of register block 130

Register			Description	Data point	Source WL	Format	Length (bits)	Scaling
Address		High/Low						
dec	hex							
33281	0x8201	-	Header; value 0x00 00 00 00	—	COM16	—	32	—
33283	0x8203	-	Active power in normal direction	283	Meter. fct.	unsigned int	16	0
33284	0x8204	-	Active power in reverse direction	285	Meter. fct.	unsigned int	16	0
33285	0x8205	-	Power factor, capacitive	287	Meter. fct.	signed int	16	–3
33286	0x8206	-	Power factor, inductive	289	Meter. fct.	signed int	16	–3
33287	0x8207	LOW	Delay time for active power in normal direction	284	Meter. fct.	unsigned char	8	0
33287	0x8207	HIGH	Delay time for active power in reverse direction	286	Meter. fct.	unsigned char	8	0
33288	0x8208	LOW	Delay time for power factor, capacitive	288	Meter. fct.	unsigned char	8	0
33288	0x8208	HIGH	Delay time for power factor, inductive	290	Meter. fct.	unsigned char	8	0
33289	0x8209	LOW	Overfrequency	303	Meter. fct.	unsigned char	8	0
33289	0x8209	HIGH	Delay time for overfrequency	304	Meter. fct.	unsigned char	8	0
33290	0x820A	LOW	Underfrequency	305	Meter. fct.	unsigned char	8	0
33290	0x820A	HIGH	Delay time for underfrequency	306	Meter. fct.	unsigned char	8	0
33291	0x820B	LOW	THD current	319	Meter. fct.	unsigned char	8	0
33291	0x820B	HIGH	Delay time for THD current	320	Meter. fct.	unsigned char	8	0
33292	0x820C	LOW	THD voltage	321	Meter. fct.	unsigned char	8	0
33292	0x820C	HIGH	Delay time for THD voltage	322	Meter. fct.	unsigned char	8	0
33293	0x820D	-	Peak factor	323	Meter. fct.	unsigned int	16	–2
33294	0x820E	-	Form factor	325	Meter. fct.	unsigned int	16	–2

Register			Description	Data point	Source WL	Format	Length (bits)	Scaling
Address		High/Low						
dec	hex							
33295	0x820F	LOW	Delay time for peak factor	324	Meter. fct.	unsigned char	8	0
33295	0x820F	HIGH	Delay time for the form factor	326	Meter. fct.	unsigned char	8	0
33296	0x8210	-	Long-time mean value of active power	291	Meter. fct.	unsigned int	16	0
33297	0x8211	-	Long-time mean value of apparent power	293	Meter. fct.	unsigned int	16	0
33298	0x8212	LOW	Delay time for long-time mean value of active power	292	Meter. fct.	unsigned char	8	0
33298	0x8212	HIGH	Delay time for long-time mean value of apparent power	294	Meter. fct.	unsigned char	8	0
33299	0x8213	-	Long-time mean value of reactive power	295	Meter. fct.	unsigned int	16	0
33300	0x8214	-	Reactive power in normal direction	297	Meter. fct.	unsigned int	16	0
33301	0x8215	LOW	Delay time for long-time mean value of reactive power	296	Meter. fct.	unsigned char	8	0
33301	0x8215	HIGH	Delay time for reactive power in normal direction	298	Meter. fct.	unsigned char	8	0
33302	0x8216	-	Reactive power in reverse direction	299	Meter. fct.	unsigned int	16	0
33303	0x8217	-	Apparent power	301	Meter. fct.	unsigned int	16	0
33304	0x8218	LOW	Delay time for reactive power in reverse direction	300	Meter. fct.	unsigned char	8	0
33304	0x8218	HIGH	Delay time for apparent power	302	Meter. fct.	unsigned char	8	0
33305	0x8219	-	Overcurrent	267	Meter. fct.	unsigned int	16	0
33306	0x821A	-	Current that flows to ground	269	Meter. fct.	unsigned int	16	0
33307	0x821B	-	Overcurrent in neutral conductor	271	Meter. fct.	unsigned int	16	0
33308	0x821C	-	Long-time mean value of current	275	Meter. fct.	unsigned int	16	0
33309	0x821D	LOW	Delay time for overcurrent	268	Meter. fct.	unsigned char	8	0
33309	0x821D	HIGH	Delay time of current that flows to ground	270	Meter. fct.	unsigned char	8	0
33310	0x821E	LOW	Delay time for overcurrent in neutral conductor	272	Meter. fct.	unsigned char	8	0
33310	0x821E	HIGH	Phase unbalance current	273	Meter. fct.	unsigned char	8	0

Register			Description	Data point	Source WL	Format	Length (bits)	Scaling
Address		High/Low						
dec	hex							
33311	0x821F	LOW	Delay time for current phase unbalance	274	Meter. fct.	unsigned char	8	0
33311	0x821F	HIGH	Delay time for long-time mean value of current	276	Meter. fct.	unsigned char	8	0
33312	0x8220	-	Undervoltage	277	Meter. fct.	unsigned int	16	0
33313	0x8221	LOW	Delay time for undervoltage	278	Meter. fct.	unsigned char	8	0
33313	0x8221	HIGH	Phase unbalance voltage	279	Meter. fct.	unsigned char	8	0
33314	0x8222	LOW	Delay time for voltage phase unbalance	280	Meter. fct.	unsigned char	8	0
33314	0x8222	HIGH	Reserved	—	—	—	8	—
33315	0x8223	-	Overvoltage	281	Meter. fct.	unsigned int	16	0
33316	0x8224	LOW	Delay time for overvoltage	282	Meter. fct.	unsigned char	8	0
33316	0x8224	-	Reserved	—	—	—	232	—
33331	0x8233	LOW	Property byte (active power in normal direction)	—	Meter. fct.	PB	8	—
33331	0x8233	HIGH	Property byte (active power in reverse direction)	—	Meter. fct.	PB	8	—
33332	0x8234	LOW	Property byte (capacitive power factor)	—	Meter. fct.	PB	8	—
33332	0x8234	HIGH	Property byte (inductive power factor)	—	Meter. fct.	PB	8	—
33333	0x8235	LOW	Property byte (delay time for active power in normal direction)	—	Meter. fct.	PB	8	—
33333	0x8235	HIGH	Property byte (delay time for active power in reverse direction)	—	Meter. fct.	PB	8	—
33334	0x8236	LOW	Property byte (delay time for capacitive power factor)	—	Meter. fct.	PB	8	—
33334	0x8236	HIGH	Property byte (delay time for inductive power factor)	—	Meter. fct.	PB	8	—
33335	0x8237	LOW	Property byte (overfrequency)	—	Meter. fct.	PB	8	—
33335	0x8237	HIGH	Property byte (delay time for overfrequency)	—	Meter. fct.	PB	8	—
33336	0x8238	LOW	Property byte (underfrequency)	—	Meter. fct.	PB	8	—
33336	0x8238	HIGH	Property byte (delay time for underfrequency)	—	Meter. fct.	PB	8	—
33337	0x8239	LOW	Property byte (current THD)	—	Meter. fct.	PB	8	—
33337	0x8239	HIGH	Property byte (delay time for current THD)	—	Meter. fct.	PB	8	—
33338	0x823A	LOW	Property byte (voltage THD)	—	Meter. fct.	PB	8	—

Register			Description	Data point	Source WL	Format	Length (bits)	Scaling
Address		High/Low						
dec	hex							
33338	0x823A	HIGH	Property byte (delay time for voltage THD)	—	Meter. fct.	PB	8	—
33339	0x823B	LOW	Property byte (peak factor)	—	Meter. fct.	PB	8	—
33339	0x823B	HIGH	Property byte (form factor)	—	Meter. fct.	PB	8	—
33340	0x823C	LOW	Property byte (delay time for peak factor)	—	Meter. fct.	PB	8	—
33340	0x823C	HIGH	Property byte (delay time for form factor)	—	Meter. fct.	PB	8	—
33341	0x823D	LOW	Property byte (long-time mean value for active power)	—	Meter. fct.	PB	8	—
33341	0x823D	HIGH	Property byte (long-time mean value for apparent power)	—	Meter. fct.	PB	8	—
33342	0x823E	LOW	Property byte (delay time for long-time mean value of active power)	—	Meter. fct.	PB	8	—
33342	0x823E	HIGH	Property byte (delay time for long-time mean value of apparent power)	—	Meter. fct.	PB	8	—
33343	0x823F	LOW	Property byte (long-time mean value for reactive power)	—	Meter. fct.	PB	8	—
33343	0x823F	HIGH	Property byte (reactive power in normal direction)	—	Meter. fct.	PB	8	—
33344	0x8240	LOW	Property byte (delay time for long-time mean value of reactive power)	—	Meter. fct.	PB	8	—
33344	0x8240	HIGH	Property byte (delay time for reactive power in normal direction)	—	Meter. fct.	PB	8	—
33345	0x8241	LOW	Property byte (reactive power in reverse direction)	—	Meter. fct.	PB	8	—
33345	0x8241	HIGH	Property byte (apparent power)	—	Meter. fct.	PB	8	—
33346	0x8242	LOW	Property byte (delay time for reactive power in reverse direction)	—	Meter. fct.	PB	8	—
33346	0x8242	HIGH	Property byte (delay time for apparent power)	—	Meter. fct.	PB	8	—
33347	0x8243	LOW	Property byte (overcurrent)	—	Meter. fct.	PB	8	—
33347	0x8243	HIGH	Property byte (current that flows to ground)	—	Meter. fct.	PB	8	—
33348	0x8244	LOW	Property byte (overcurrent in neutral conductor)	—	Meter. fct.	PB	8	—
33348	0x8244	HIGH	Property byte (long-time mean value of current)	—	Meter. fct.	PB	8	—
33349	0x8245	LOW	Property byte (delay time for overcurrent)	—	Meter. fct.	PB	8	—
33349	0x8245	HIGH	Property byte (delay time of current that flows to ground)	—	Meter. fct.	PB	8	—
33350	0x8246	LOW	Property byte (delay time for overcurrent in neutral conductor)	—	Meter. fct.	PB	8	—

Register			Description	Data point	Source WL	Format	Length (bits)	Scaling
Address		High/Low						
dec	hex							
33350	0x8246	HIGH	Property byte (phase unbalance current)	—	Meter. fct.	PB	8	—
33351	0x8247	LOW	Property byte (delay time for phase unbalance current)	—	Meter. fct.	PB	8	—
33351	0x8247	HIGH	Property byte (delay time for long-time mean value of current)	—	Meter. fct.	PB	8	—
33352	0x8248	LOW	Property byte (undervoltage)	—	Meter. fct.	PB	8	—
33352	0x8248	HIGH	Property byte (delay time for undervoltage)	—	Meter. fct.	PB	8	—
33353	0x8249	LOW	Property byte (phase unbalance voltage)	—	Meter. fct.	PB	8	—
33353	0x8249	HIGH	Property byte (delay time for phase unbalance voltage)	—	Meter. fct.	PB	8	—
33354	0x824A	LOW	Property byte (overvoltage)	—	Meter. fct.	PB	8	—
33354	0x824A	HIGH	Property byte (delay time for overvoltage)	—	Meter. fct.	PB	8	—

8.7.20 Register block RB 160 parameters for communication

The following table shows register block 160, in which the parameters for communication are stored. These parameters can be read and also set via this data set.

The table contains the register blocks RB 160: Parameters for communication (length 39 registers, read/write):

Table 8- 33 Content of register block 160

Register			Description	Data point	Source WL	Format	Length (bits)	Scaling
Address		High/Low						
dec	hex							
40961	0xA001	-	Header; value 0x00 00 00 00	—	COM16	—	32	—
40963	0xA003	LOW	Reserved	—	—	—	8	—
40963	0xA003	HIGH	Modbus address	5	COM16	unsigned char	8	0
40964	0xA004	LOW	Basic type of Modbus data transfer	6	COM16	Hex	2	—
40964	0xA004	HIGH	Reserved	—	—	—	8	—
40965	0xA005	-	Data in the cyclic profile of Modbus	7	COM16	Format (7)	224	—
40979	0xA013	-	Reserved	—	—	—	48	—
40982	0xA016	-	IP address of the BDA PLUS	10	BDA PLUS	Format (10)	40	—
40985	0xA019	LOW	Modbus transmission rate (baud rate)	427	COM16	Format (427)	8	—
40985	0xA019	HIGH	Parity	428	COM16	Format (428)	8	—
40986	0xA01A	-	Reserved	—	—	—	144	—
40995	0xA023	LOW	Property byte (parity)	428	COM16	PB	8	—
40995	0xA023	HIGH	Property byte (Modbus transmission rate (baud rate))	427	COM16	PB	8	—
40996	0xA024	LOW	Reserved	—	—	—	8	—
40996	0xA024	HIGH	Property byte (Modbus address)	5	COM16	PB	8	—
40997	0xA025	LOW	Property byte (basic type of Modbus data transfer)	6	COM16	PB	8	—
40997	0xA025	HIGH	Reserved	—	—	—	8	—
40998	0xA026	LOW	Property byte (data in the cyclic profile of Modbus)	7	COM16	PB	8	—
40998	0xA026	HIGH	Reserved	—	—	—	8	—
40999	0xA027	LOW	Property byte (IP address of the BDA PLUS)	—	BDA PLUS	PB	8	—

8.7.21 Register block RB 162 device configuration

The table below shows register block 162 that contains the device configuration. The circuit breaker currently connected can be read out via this data set.

The table below contains the register blocks RB 162: Device configuration (length 38 registers, read-only):

Table 8- 34 Content of register block 162

Register			Description	Data point	Source WL	Format	Length (bits)	Scaling
Address		High/Low						
dec	hex							
41473	0xA201	-	Header; value 0x00 00 00 00	—	COM16	—	32	—
41475	0xA203	-	ID number of the COM16	91	COM16	16 x char	128	—
41483	0xA20B	-	Order number of the circuit breaker (on the SENTRON VL, this is the order number of the trip unit)	103	ETU	Format (103)	160	—
41493	0xA215	LOW	Type (metering function, metering function PLUS)	138	Meter. fct.	Format (138)	8	—
41493	0xA215	HIGH	Type of trip unit	412	ETU	Format (412)	5	—
41494	0xA216	-	Reserved	—	—	—	224	—
41508	0xA224	LOW	Property byte (ID number of the COM16)	—	COM16	PB	8	—
41508	0xA224	HIGH	Property byte (order number of the circuit breaker (on the SENTRON VL, this is the order number of the trip unit))	—	ETU	PB	8	—
41509	0xA225	LOW	Property byte (type (metering function, metering function PLUS))	—	Meter. fct.	PB	8	—
41509	0xA225	HIGH	Property byte (type of trip unit)	—	ETU	PB	8	—
41510	0xA226	LOW	Reserved	—	—	—	8	—

8.7.22 Register block RB 165 identification comment

The table below shows register block 165 in which user-specific texts such as comments, plant identifier, date and author can be stored in the SENTRON circuit breaker.

The table below contains the register blocks RB 165: Identification comment (length 97 registers, read/write):

Table 8- 35 Content of register block 165

Register			Description	Data point	Source WL	Format	Length (bits)	Scaling
Address		High/Low						
dec	hex							
42241	0xA501	-	Header; value 0x00 00 00 00	—	COM16	—	32	—
42243	0xA503	-	User text (freely editable)	20	COM16	64 x char	512	—
42275	0xA523	-	Plant identifier (freely editable)	21	COM16	64 x char	512	—
42307	0xA543	-	Date (freely editable)	22	COM16	Time	64	—
42311	0xA547	-	Author (freely editable)	23	COM16	30 x char	240	—
42326	0xA556	-	Reserved	—	—	—	160	—
42336	0xA560	LOW	Property byte (user text (freely editable))	—	COM16	PB	8	—
42336	0xA560	HIGH	Property byte (plant identifier (freely editable))	—	COM16	PB	8	—
42337	0xA561	LOW	Property byte (date (freely editable))	—	COM16	PB	8	—
42337	0xA561	HIGH	Property byte (author (freely editable))	—	COM16	PB	8	—

8.8 SENTRON 3VL data areas

8.8.1 Cyclic data

Register			Description	Data point	Mnemonic	Source VL	Format	Length (bits)	Scaling
Address		High/Low							
dec	hex								
5001	0x1389		Switch status (status byte)	—		COM21	Status byte	32	—
5002	0x138A		Current in phase L1	380	Meter-CurrentL1	ETU	unsigned int	512	0
5003	0x138B		Current in phase L2	381	Meter-CurrentL2	ETU	unsigned int	512	0
5004	0x138C		Current in phase L3	382	Meter-CurrentL3	ETU	unsigned int	64	0
5005	0x138D		Current of phase with maximum load	374	Meter-Current-MaxAll	ETU	unsigned int	240	0
5006	0x138E		Current in neutral conductor	375	Meter-Current-Neutral	ETU	unsigned int	160	0
5007	0x138F		Current which flows to ground	376	Meter-Current-Ground	ETU	unsigned int	8	0
5008	0x1390		Currently pending alarms	402	Diag-Warning-TripUnit	ETU	Format (402)	8	—
5009	0x1391		Current at the moment of shutdown	403	Diag-Interrupt-FaultCurrent	ETU	unsigned int	8	0(VL)/1
5010	0x1392	LOW	Phase at the moment of shutdown	404	Diag-Interrupt-FaultPhase	ETU	Format (373)	8	—
5010	0x1392		Reserved	12	StatusTripUnit	ETU	unsigned char		—
5011	0x1393	LOW	Reserved	418	StatusZSIModule	ETU	Format (418)		—
5011	0x1393	HIGH	Reserved	—	—	—	Format (307)		—
5012	0x1394	LOW	Reserved	—	—	—	unsigned char		—
5012	0x1394	HIGH	Reserved	—	—	—	unsigned char		—

Register			Description	Data point	Mnemonic	Source VL	Format	Length (bits)	Scaling
Address		High/Low							
dec	hex								
5013	0x1395	LOW	Status of the circuit breaker (on/off/powered, etc.)	328	Status-CBreaker	COM21	Format (328)		—
5013	0x1395	HIGH	Last unacknowledged tripping operation of the trip unit	401	DiagTrips-TripUnit	ETU	Format (401)		—
5014	0x1396	LOW	Shows the phase with maximum load	373	Meter-PhaseMaxCurrent	ETU	Format (373)		—
5014	0x1396	HIGH	Position of the circuit breaker in the frame	24	Status-Position-CBreaker	COM21	Format (24)		—
5015	0x1397		Mean current value over the three phases	383	Meter-Current-AVGAll	ETU	unsigned int		0
5016	0x1398		Long-time mean value of 3-phase current	193	Meter-Current-DemandAVG	ETU	unsigned int		0
5017	0x1399	LOW	Phase unbalance current (as %)	172	Meter-Current-Unbal	ETU	unsigned char		0
5017	0x1399	HIGH	Maximum phase unbalance current in %	437	Meter-Current-UnbalMax	ETU	unsigned char		0
5018	0x139A		Maximum mean value over the three phases	395	Meter-CurrentAVGAllMax	ETU	unsigned int		0
5019	0x139B		Maximum current in neutral conductor	391	Meter-Current-NeutralMax	ETU	unsigned int		0
5020	0x139C		Maximum current which flows to ground	393	Meter-Current-GroundMax	ETU	unsigned int		0
5021	0x139D		Max. current over the phases L1, L2 and L3	398	MeterCurrentAllTimeMax	ETU	unsigned int		0
5022	0x139E		Maximum long-time mean value for current	245	Meter-Current-DemandAVGMax	ETU	unsigned int		0
5023	0x139F	LOW	Error in the COM21			—	unsigned char		—

Register			Description	Data point	Mnemonic	Source VL	Format	Length (bits)	Scaling
Address		High/Low							
dec	hex								
5023	0x139F	HIGH	COM21 not connected to the ETU			COM21	unsigned char		—
5024	0x13A0		Change bits - data changed/updated			COM21	Format (new)		—

8.8.2 Protection settings

Register			Description	Data point	Mnemonic	Source VL	Format	Length (bits)	Scaling
Address		High/Low							
dec	hex								
5041	0x13B1		Overload parameter I_R parameter set A (PS A)	333	ParaIrA	ETU	Status byte	16	0
5042	0x13B2		Time-lag class t_R PS A	335	ParatrA	ETU	unsigned int	16	–1
5043	0x13B3		Short-circuit protection instantaneous I_i PS A	336	ParaIiA	ETU	unsigned int	16	1 / 0 (VL)
5044	0x13B4		Short-circuit protection delayed I_{sd} PS A	337	ParaIsdA	ETU	unsigned int	16	1 / 0 (VL)
5045	0x13B5		Delay time for short-circuit protection t_{sd} PS A	338	ParatsdA	ETU	unsigned int	16	–3
5046	0x13B6	LOW	I^2t characteristic for delayed short-circuit protection PS A	343	ParaSwitchI2tdA	ETU	unsigned int	1	—
5046	0x13B6	HIGH	I^2t characteristic for ground-fault protection PS A	344	ParaSwitchI2tgA	ETU	unsigned int	1	—
5047	0x13B7		Ground-fault protection I_g PS A	339	ParaIgA	ETU	Format (402)	16	0
5048	0x13B8		Delay time for ground fault t_g PS A	340	ParatgA	ETU	unsigned int	16	–3
5049	0x13B9	LOW	Overload protection neutral conductor I_N (VL)	365	ParaIN_VL	ETU	Format (373)	8	0
5049	0x13B9	HIGH	ZSI on/off	421	ParaZSS-Enable	ETU	unsigned char	8	—
5050	0x13BA	LOW	Time lag class (SENTRON VL LCD ETU40M only)	331	ParaTrip-Class	ETU	unsigned char	8	0
5050	0x13BA	HIGH	Current unbalance	139	ParaUnsym-Current	ETU	Format (307)	8	0
5051	0x13BB	LOW	N transformer connected	411	EnvNeutral-Sensor	ETU	unsigned char	1	—
5051	0x13BB	HIGH	Thermal memory PS A	346	ParaSwitch-thermA	ETU	unsigned char	1	—
5052	0x13BC	LOW	Property byte (overload pre-alarm (VL only))	369	ParaPreAlarm	LCD ETU	Format (328)	8	—

Register			Description	Data point	Mnemonic	Source VL	Format	Length (bits)	Scaling
Address		High/Low							
dec	hex								
5052	0x13BC	HIGH	Property byte (short-circuit protection delayed I_{sd} PS A)	337	ParaIsdA	LCD ETU	Format (401)	8	—
5053	0x13BD		Overload pre-alarm (VL only)	369	ParaPreAlarm	LCD ETU	Format (373)	16	0
5054	0x13BE	LOW	Ground fault transformer detection type	410	EnvGround-Sensor	LCD ETU	Format (410)	8	—
5055	0x13BF	LOW	Activation (short-circuit protection instantaneous I_i PS A)			LCD ETU	boolean	8	—
5055	0x13BF	HIGH	Activation (ground-fault alarm I_g2 PS A)			LCD ETU	boolean	8	—
5056	0x13C0		Ground fault alarm I_g2 PS A	341	ParaIg2A	LCD ETU	unsigned int	160	
5057	0x13C1		Delay time for ground fault alarm t_g2 PS A	342	Paratg2A	LCD ETU	unsigned int	16	–3

8.8.3 Diagnostics/counters

Register			Description	Data point	Mnemonic	Source VL	Format	Length (bits)	Scaling
Address		High/Low							
dec	hex								
5061	0x13C5		Number of short-circuit trips (SI)	104	DiagCounterShortCircuit	COM21	unsigned int	16	0
5062	0x13C6		Reserved			—	unsigned char	16	—
5063	0x13C7		Number of overload trips (L)	105	DiagCounterOverload	COM21	unsigned int	16	0
5064	0x13C8		Number of ground-fault tripping operations (G)	106	DiagCounterGroundFault	COM21	unsigned int	16	0
5065	0x13C9		Number of switching operations caused by trips	81	DiagCount-GearTrip	COM21	unsigned int	16	0
5066	0x13CA		Runtime meter (when On + current > 0)	83	DiagHour-Metering	COM21	unsigned long	1	0
5068	0x13CC		tbd.		—	—	unsigned int	1	0
5069	0x13CD		tbd.		—	—	unsigned int	16	0

8.8.4 Configuration

Register			Description	Data point	Mnemonic	Source VL	Format	Length (bits)	Scaling
Address		High/Low							
dec	hex								
5081	0x13D9		Circuit breaker frame	378	EnvLab-FrameOr-SensorRating	ETU	unsigned int	16	0
5082	0x13DA		Rating plug	377	EnvRatingPlug	ETU	unsigned int	16	0
5083	0x13DB	LOW	Type of trip unit	412	EnvTripUnit-Name	ETU	Format (412)	5	—
5083	0x13DB	HIGH	Ground fault enabled	438	ParaGFEnable	ETU		1	—
5084	0x13DC		Reserved			—	unsigned char	16	—
5085	0x13DD	LOW	Number of poles of circuit breaker	108	EnvPol	ETU	Format (108)	3	—
5085	0x13DD	HIGH	Reserved			—	unsigned char	8	—
5086	0x13DE		tbd.	439	—	—	unsigned int	16	0
5087	0x13DF	LOW	Market in which the trip unit is used	95	EnvMarket-CircuitBreaker	ETU	Format (95)	2	—
5087	0x13DF	HIGH	Ground fault transformer detection type	410	EnvGround-Sensor	ETU	Format (410)	2	—

8.8.5 Trip log

Register			Description	Data point	Mnemonic	Source VL	Format	Length (bits)	Scaling
Address		High/Low							
dec	hex								
5101	0x13ED		Trip log of the last 5 tripping operations with time	15	DiagTripLog	COM21	Format (15)	480	—

8.8.6 Commands

Register			Description	Data point	Mnemonic	Source VL	Format	Length (bits)	Scaling
Address		High/Low							
dec	hex								
5141	0x1415	LOW	Controls the commands/functions (e.g. delete/reset min./max. values) of the communication module	18	ControlComBox	COM21	Format (18)	8	—
5141	0x1415	HIGH	Controls the outputs of the communication module (e.g. switching the breaker)	19	ControlInOutComBox	COM21	Format (19)	8	—
5142	0x1416		Controls the trip unit	406	ControlTripUnit	ETU	Format (406)	16	—
5143	0x1417	LOW	tbd.	420	—	—	unsigned char	8	—
5143	0x1417	HIGH	ZSI on/off	421	ParaZSIEnable	ETU	Format (421)	8	—
5144	0x1418	LOW	Active parameter set	370	ControlSwitch-ParaSet	ETU	Format (370)	1	—
5144	0x1418	HIGH	Reserved				unsigned char	8	—
5145	0x1419	LOW	tbd.			—	tbd.	8	—
5145	0x1415	HIGH	tbd.			COM21	tbd.	8	—

8.8.7 Settings and status of the communication module

Register			Description	Data point	Mnemonic	Source VL	Format	Length (bits)	Scaling
Address		High/Low							
dec	hex								
5161	0x1429	LOW	MODBUS address	5	ParaCom-Address	COM21	unsigned char	8	0
5161	0x1429	HIGH	Reserved			—	unsigned char	8	—
5162	0x142A	LOW	MODBUS transmission rate (baud rate)	427	ParaCom-Baudrate	COM21	Format (427)	8	—
5162	0x142A	HIGH	Parity	428	ParaComParity	COM21	Format (428)	8	—
5163	0x142B		System time of the circuit breaker	90	Control-SystemTime	COM21	Time	64	—
5167	0x142F	LOW	tbd.	—	—	—	unsigned char	3	—
5167	0x142F	HIGH	MODBUS write protection (DPWriteEnable)	14	ControlEnable-DPWrite	COM21	Format (14)	1	—
5168	0x1430	LOW	Basic type of MODBUS data transfer	6	ParaCom-BasisTyp	COM21	Hex	2	—
5168	0x1430	HIGH	Reserved			—	unsigned char	8	—
5169	0x1431		Data in the cyclic profile of MODBUS	7	ParaCycleData	COM21	Format (7)	224	—
5183	0x143F	LOW	Status of the connected MODBUS	17	StatusDPBus	COM21	Format (17)	3	—
5183	0x143F	HIGH	Reserved			—	unsigned char	8	—

8.8.8 Description of the communication module

Register			Description	Data point	Mnemonic	Source VL	Format	Length (bits)	Scaling
Address		High/Low							
dec	hex								
5201	0x1451		User text (freely editable)	20	EnvUserText	COM21	64 x char	512	—

8.8.9 ETU identification

Register			Description	Data point	Mnemonic	Source VL	Format	Length (bits)	Scaling
Address		High/Low							
dec	hex								
5241	0x1479		Identification number of trip unit	409	EnvIdentTripUnit	ETU	17 x char	136	—
5249	0x1481		Hardware/software version 3VL	423	EnvHardSoft3VL	ETU	16 x char	128	—

8.8.10 Identification of the communication module

Register			Description	Data point	Mnemonic	Source VL	Format	Length (bits)	Scaling
Address		High/Low							
dec	hex								
5261	0x148D		Identification number of the COM16/COM21	91	EnvIdent-ComBox	COM21	16 x char	128	—
5269	0x1495		tbd.	92	EnvHardSoftComBox	COM21	16 x char	128	—

8.9 Formats

8.9.1 Formats of the data points

The different formats of the data points are described in this section. This includes the description of the Motorola format used, e.g. "int" and "unsigned int", as well as, above all, the description of special formats. A special format is, for example, the binary breakdown of the data point that specifies the last tripping operation.

All available data points and the register block in which they are transferred over Modbus RTU have been described on the preceding pages. In the "Format" column, an explanation is given of which data type is referred to and how this content is to be interpreted. A distinction must be made here between generally valid formats and special formats that are usually binary coded.

8.9.2 General data formats

Many data points have a data length of more than one byte. In this case, the numbers can be stored either in Little-Endian- format (Intel) or in Big-Endian- format (Motorola) depending on the processor type for which the format has been developed. In Big-Endian format, the higher-order byte is before the lower-order byte to facilitate reading, and with Intel, the bytes are in the opposite order.

The table below shows the standard formats used, with their value ranges and purposes.

Table 8- 36 Standard data formats

Format	Length in byte	Signs	Value range unscaled	Used for ...
unsigned int	2	—	0 ... 65535	Measured values, parameters, etc.
signed int	2	✓	– 32678 ... 32767	Negative measured values
unsigned char	1	—	0 ... 255	Measured values, parameters with lower value range
char	1	—	0 ... 255	ASCII characters
unsigned long	4	—	0 ... 4294967295	Measured values and maintenance information with a large measuring range

In general, all data communicated over Modbus RTU is transferred in the Motorola (Big-Endian) format.

Format "unsigned int"

The format "unsigned int" is used primarily for transferring parameters and measured values, as well as statistical information. If the value range is insufficient, scaling is used.

To transfer measured values that can also be negative (e.g. power factors), the format "signed int" is used.

Format "unsigned char"

If the value range of a parameter or measured value is severely restricted (e.g. phase unbalance of 0 to 50%), the data type "unsigned char" is sufficient.

Text elements consisting of ASCII characters are assembled using the data type "char". In this case, the data type "unsigned char" indicates a "byte" that can assume a value from the range 0 to 255.

Format "unsigned long"

If the value range is insufficient, the data type "unsigned long" is fallen back on. This is used, for example, with the runtime meter. If "unsigned int" were to be used for this, the runtime meter would overflow after seven-and-a-half years.

Format "hex"

The format "hex" is always used where there is a concatenation of binary information, e.g. when transferring the statuses at the inputs of the binary input module. However, it is also used when hexadecimal numbers are transferred.

Format of the property byte

Chapter Cyclic data (Page 234) contains the description of the format of the property byte PB.

Time format

The S7-compatible time format (DATE_AND_TIME) is used for communicating time stamps. The time stamp in RB100 is represented according to the PROFIBUS standard and is an exception to this rule.

Table 8- 37 Format time

Byte	Bit	Meaning
0	—	Year
1	—	Month
2	—	Day
3	—	Hour
4	—	Minute
5	—	Seconds
6	—	Low-order digits of milliseconds
7	4 - 7	Higher-order digits of milliseconds (4MSB)
7	0 - 3	Weekday (1 =Sunday, ..., 7 = Saturday)

All time stamps are transferred in this format

Table 8- 38 PROFIBUS time format

Byte	Bit	Meaning
0	—	Higher-order digits of milliseconds
1	—	Low-order digits of milliseconds
2	—	Minute
3	0 - 4	Hour
3	7	1 = Summertime; 0 = Wintertime
4	0 - 4	Day of the month (1 ... 31)
4	5 - 7	Weekday (1 = Monday, ..., 7 = Sunday)
5	—	Month
6	—	Year (02 = 2002)
7	—	Reserved

This time format is compliant with the PROFIBUS time format.

8.9.3 Special data formats

Special data formats are used where the inflexible standard formats cannot be used. The special data formats are used, for example, with binary-coded or complex data points. If a special data format has been used with a data point, this is indicated in the first and second part of this chapter in the format column with **Format (X)**. The X represents a consecutive number of the special data formats used, described below. In the majority of cases, the X in the format agrees with the data point number to simplify the search.

In the case of bit interpretations, the meaning is always to be seen with a high-active signal.

The table below shows the format (7) for the data in the cyclic profile of Modbus.

Table 8- 39 Format (7) cyclic data in DP

Byte	Meaning
0	Assignment (data point number) of the 1st data block in the cyclic message frame
2	Assignment (data point number) of the 2nd data block in the cyclic message frame
4	Assignment (data point number) of the 3rd data block in the cyclic message frame
6	Assignment (data point number) of the 4th data block in the cyclic message frame
8	Assignment (data point number) of the 5th data block in the cyclic message frame
10	Assignment (data point number) of the 6th data block in the cyclic message frame
12	Assignment (data point number) of the 7th data block in the cyclic message frame
14	Assignment (data point number) of the 8th data block in the cyclic message frame
16	Assignment (data point number) of the 9th data block in the cyclic message frame
18	Assignment (data point number) of the 10th data block in the cyclic message frame
20	Assignment (data point number) of the 11th data block in the cyclic message frame
22	Assignment (data point number) of the 12th data block in the cyclic message frame
24	Assignment (data point number) of the 13th data block in the cyclic message frame
26	Assignment (data point number) of the 14th data block in the cyclic message frame

The table below shows the format (10) for the IP addresses that consist of four digits from 0 to 255 each separated by a dot, e.g. 192.168.121.101.

Table 8- 40 Format (10) IP address BDA PLUS

Byte	Meaning
0	1. sub-IP address X._._._
1	2. sub-IP address _.X._._
2	3. sub-IP address _._.X.__
3	4. sub-IP address _._._.X
4	Reserved

The table below shows the format (14) for write protection. The write protection can be deactivated using a hardware input on COM16 or COM 21.

Table 8- 41 Format (14) write protection

Byte	Bit	Meaning
0	0	0 = write protection active; 1 = write protection inactive

8.9.4 Data formats 15 to 24

The table below shows the format (15) "trip log". It contains the last 5 tripping operations with time stamp and source.

Table 8- 42 Format (15) "trip log"

Byte	Bit	Meaning
0-7	Time	Time stamp of the 1st tripping operation
8	—	Reserved 0x00
9	Reason for tripping operation	Reason for trip of 1st tripping operation 1 = overload 2 = instantaneous Short circuit 3 = delayed Short-circuit 4 = Ground fault 5 = Ext. protection function 6 = Overload N-conductor 7 = ETU self-protection (analog override) 8 = Overtemperature 20 = Unbalance Current 21 = Unbalance Voltage 22 = Active power in normal dir. 23 = Active power in reverse dir. 24 = Overvoltage 25 = Undervoltage 26 = Overfrequency 27 = Underfrequency 28 = THD current 29 = THD voltage 30 = Change in phase dir. of rot.

Byte	Bit	Meaning
10	—	Source of 1st tripping operation 14 = Meter. function/M. PLUS 25 = Trip unit
11	—	Reserved 0x00
12-19	—	Time stamp of 2nd tripping operation
20	—	Reserved 0x00
21	—	Reason for 2nd tripping operation
22	—	Source of 2nd tripping operation
23	—	Reserved 0x00
24-31	—	Time stamp of 3rd tripping operation
32	—	Reserved 0x00
33	—	Reason for 3rd tripping operation
34	—	Source of 3rd tripping operation
35	—	Reserved 0x00
36-43	—	Time stamp of 4th tripping operation
44	—	Reserved 0x00
45	—	Reason for 4th tripping operation
46	—	Source of 4th tripping operation
47	—	Reserved 0x00
48-55	—	Time stamp of 5th tripping operation
56	—	Reserved 0x00
57	—	Reason for 5th tripping operation
58	—	Source of 5th tripping operation
59	—	Reserved 0x00

The table below shows the format (16) "event log". It contains the last 10 events with time stamp. Example, see below.

Table 8- 43 Format (16) "event log"

Byte	Bit	Meaning		
0-7	—	Time stamp of 1st event		
8	—	Reserved 0x00		
9	—	Coming "+"	Going "-"	Event description
		1	2	Overload warning
		3	4	Overload warning N-conductor
		5	6	Load shedding alarm
		7	8	Load pick up message
		9	10	Phase unbalance warning
		11	12	Fault in trip unit
		13	14	Ground fault warning
		15	16	Overtemperature warning
		20	—	Switch on

Byte	Bit	Meaning		
		21	—	Switch off
		40	41	Threshold warning TV current
		42	43	TV ground fault
		44	45	TV overcurrent N-conductor
		46	47	TV unbalance current
		48	49	TV long-time mean value for current
		50	51	TV undervoltage
		52	53	TV unbalance voltage
		54	55	TV overvoltage
		56	57	TV long-time mean value for active power
		58	59	TV long-time mean value for apparent power
		60	61	TV long-time mean value for reactive power
		62	63	TV reactive power in normal direction
		64	65	TV reactive power in reverse direction
		66	67	TV apparent power
		68	69	TV overfrequency
		70	71	TV underfrequency
		72	73	TV under power factor
		74	75	TV over power factor
		76	77	TV THD current
		78	79	TV THD voltage
		80	81	TV peak factor
		82	83	TV form factor
		84	85	TV active power in normal direction
		86	87	TV active power in reverse direction
10	—	Source of 1st event 14 = Meter. function/M. PLUS 25 = Trip unit		
11	—	Reserved 0x00		
12-19	—	Time stamp of 2nd event		
20	—	Reserved 0x00		
21	—	2. event		
22	—	Source of 2nd event		
23	—	Reserved 0x00		
24-31	—	Time stamp of 3rd event		
32	—	Reserved 0x00		
33	—	3. event		
34	—	Source of 3rd event		
35	—	Reserved 0x00		
36-43	—	Time stamp of 4th event		
44	—	Reserved 0x00		
45	—	4. event		

Byte	Bit	Meaning
46	—	Source of 4th event
47	—	Reserved 0x00
48-55	—	Time stamp of 5th event
56	—	Reserved 0x00
57	—	5. event
58	—	Source of 5th event
59	—	Reserved 0x00
60-67	—	Time stamp of 6th event
68	—	Reserved 0x00
69	—	6. event
70	—	Source of 6th event
71	—	Reserved 0x00
72-79	—	Time stamp of 7th event
80	—	Reserved 0x00
81	—	7. event
82	—	Source of 7th event
83	—	Reserved 0x00
84-91	—	Time stamp of 8th event
92	—	Reserved 0x00
93	—	8. event
94	—	Source of 8th event
95	—	Reserved 0x00
96-103	—	Time stamp of 9th event
104	—	Reserved 0x00
105	—	9. event
106	—	Source of 9th event
107	—	Reserved 0x00
108-115	—	Time stamp of 10th event
116	—	Reserved 0x00
117	—	10. event
118	—	Source of 10th event
119	—	Reserved 0x00

Table 8- 44 Event log, example (incomplete or extracts)

Date	Time stamp	event
06.06.08	14:19:58	- Threshold THD voltage
06.06.08	14:19:44	+ Threshold THD voltage
06.06.08	14:19:24	- Threshold undervoltage
06.06.08	14:19:14	+ Threshold undervoltage

The table below shows the format (17) "Status MODBUS RTU". The status can be used to scan for a cyclic connection.

Table 8- 45 Format (17) "Status MODBUS RTU"

Byte	Bit	Meaning
0	0	0 = Communication active; 1 = Communication inactive
0	1	The communication module has no valid MODBUS RTU address
0	2	Modbus RTU address can no longer be changed

The table below shows the format (18) "Control communication module". Some settings of the switch can be changed via this format.

Table 8- 46 Format (18) "Control communication module"

Byte	Bit	Meaning
0	2	Deletes the maintenance counters
0	3	Deletes the min./max. temperatures
0	4	Deletes all min./max. values except temperature
0	5	Synchronizes the clock to xx:30:00.000
0	6	Deletes the contents of the trip log and event log

The table below shows the format (19) "Control communication module outputs". The circuit breaker can be switched on or off with this, for example.

Table 8- 47 Format (19) "Control communication module outputs"

Byte	Bit	Meaning	
0	0	Set user output	
0	1	Reset user output	
0	2	Open circuit breaker	
0	3	Close the circuit breaker	
0	4	Switch user output mode to trip message [1]	
0	5	Status of user output mode [1]	
		0	Trip is output
		1	Actuation by user
0	6	Read status of user output	
0	7	Read status of user input (COM16 only)	

[1] with firmware version V1.13.0 of the COM16 and higher. With previous versions, the bits are always set to 0, and activation by the user is active.

The table below shows the format (24) "position in frame". Data point 24 specifies the position of the SENTRON WL in the guide frame.

Table 8- 48 Format (24) "Position in frame"

Byte	Value	Meaning
0	0	Disconnected position
0	1	Connected position
0	2	Test position
0	3	Switch not available

8.9.5 Data formats 88 to 162

The table below shows the format (88) "CubicleBUS modules" that contains the modules connected on the CubicleBUS.

Table 8- 49 **Format (88) "CubicleBUS modules"**

Byte	Bit	Meaning
0	0	COM15
0	1	Trip unit ETU
0	2	ZSI module
1	0	Configurable digital output module
1	2	Digital output module #2
1	3	Digital input module #2
1	4	Breaker Status Sensor BSS
1	5	Digital output module #1
1	6	Digital input module #1
2	1	BDA PLUS
2	3	Graphic display ETU76B
2	4	Analog output module #2
2	5	Analog output module #1
2	6	Metering function or M. PLUS

The table below shows the format (95) "Market" specifying the market for which the circuit breaker has been built and tested.

Table 8- 50 **Format (95) "Market"**

Byte	Value	Meaning
0	1	IEC
0	2	UL
0	3	ANSI

The table below shows the format (99) "Switching capacity class" that specifies the maximum level of the breaking current.

Table 8- 51 **Format (99) "Switching capacity class"**

Byte	Value	Meaning
0	2	ECO switching capacity N/IntClassN
0	3	Standard switching capacity S/IntClassS
0	4	High switching capacity H/IntClassH
0	5	Extremely high switching capacity C/IntClassC

The table below shows the format (100) "Size". The size is determined by the rated switch current and the switching capacity class.

Table 8- 52 **Format (100) "Size"**

Byte	Value	Meaning
0	1	Size 1
0	2	Size 2
0	3	Size 3

The table below shows the format (103) "Order number LS", via which the switch can be identified.

Table 8- 53 **Format (103) "Order number LS"**

Byte	Bit	Meaning
0	—	3
1	—	W
2	—	L
3	—	Market
4	—	Size
5/6	—	Rated current
7	—	Hyphen
8	—	Switching capacity class
9	—	Trip unit E = ETU45B without display, F = ETU45B with display, J = ETU55B, N = ETU76B
10	—	Trip unit supplement B = without ground fault detection module G = with ground fault detection module
11	—	Number of poles
12	—	Type of main connections
13	—	Hyphen
14	—	Drive
15	—	1st auxiliary trip unit
16	—	2nd auxiliary trip unit
17	—	Auxiliary current switch
18	0	Option F02
18	2	Option F04
18	3	Option F05
18	6	Option F01
18	7	Options F20 to F22
19	0	Option K01
19	1	Option K10 to K13

The table below shows the format (107) "switched-off I^2t values" that contains the total of switched-off I^2t values per phase in the format "unsigned long".

Table 8- 54 **Format (107) "Switched-off I^2t values"**

Byte	Bit	Meaning
0	—	Phase L1 (unsigned long)
4	—	Phase L2 (unsigned long)
8	—	Phase L3 (unsigned long)
12	—	Phase N (unsigned long)

The table below shows the format (108) "Number of poles" that specifies the number of protected poles for the main circuit.

Table 8- 55 **Format (108) "Number of poles"**

Byte	Value	Meaning
0	1	3-pole
0	2	4-pole (with N-conductor)

The table below shows the format (111) "Switch position DI" that also distinguishes the switch position of the digital input module between Module 1 and 2.

Table 8- 56 **Format (111) "Switch position DI"**

Byte	Value	Meaning
0	1	Parameter set switching (Module #1)
0	2	6 x digital inputs (Module #2)

The table below shows the format (119) "Switch position DO" that specifies which output block is selected with which delay.

Table 8- 57 **Format (119) "Switch position DO"**

Byte	Value	Meaning
0	0x01	Module #1 trip instantaneous
0	0x02	Module #1 trip delayed 200 ms
0	0x03	Module #1 trip delayed 500 ms
0	0x04	Module #1 trip delayed 1 s
0	0x05	Module #1 trip delayed 2 s
0	0x06	Module #2 alarm instantaneous
0	0x07	Module #2 alarm delayed 200 ms
0	0x08	Module #2 alarm delayed 500 ms
0	0x09	Module #2 alarm delayed 1 s
0	0x0A	Module #2 alarm delayed 2 s

The table below shows the format (121) "Control DO outputs" for controlling the outputs of the digital output modules with rotary coding switches.

Table 8- 58 **Format (121) "Control DO outputs"**

Byte	Value	Meaning
0	0	No action
	1	Set output 1 ("1")
	2	Reset output 1 ("0")
	3	Set output 2 ("1")
	4	Reset output 2 ("0")
	5	Set output 3 ("1")
	6	Reset output 3 ("0")
	7	Set output 4 ("1")
	8	Reset output 4 ("0")
	9	Set output 5 ("1")
	10	Reset output 5 ("0")
	11	Set output 6 ("1")
	12	Reset output 6 ("0")
	13	Switch force mode off (overwriting of the actually valid data)

The table below shows the format (129) "Configurable output module". Event 1 of the 1st output provides an example of the assignment for all others.

Table 8- 59 **Format (129) "Configurable output module"**

Byte	Value	Meaning
0	—	1st event at the 1st output
1	—	2nd event at the 1st output
2	—	3rd event at the 1st output
3	—	4th event at the 1st output
4	—	5th event at the 1st output
5	—	6th event at the 1st output
6	—	1st event at the 2nd output
7	—	2nd event at the 2nd output
8	—	3rd event at the 2nd output
9	—	4th event at the 2nd output
10	—	5th event at the 2nd output
11	—	6th event at the 2nd output
12	—	1st event at the 3rd output
13	—	2nd event at the 3rd output
14	—	3rd event at the 3rd output
15	—	4th event at the 3rd output
16	—	5th event at the 3rd output
17	—	6th event at the 3rd output

Byte	Value	Meaning
18	—	Event at the 4th output
19	—	Event at the 5th output
20	—	Event at the 6th output
0	0x00	Not assigned
0	0x01	Switch on
0	0x02	Switch off
0	0x03	Spring energy store compressed
0	0x04	Ready for switching on
0	0x05	General warning
0	0x06	Group tripped signal
0	0x07	Write protection active
0	0x08	Communications OK
0	0x3A	Trigger event A occurred
0	0x3B	Trigger event B occurred
0	0x3C	Parameter set A active
0	0x3D	Parameter set B active
0	0x3E	Communication bit 1 (#426)
0	0x3F	Communication bit 2 (#426)
0	0x40	Communication bit 3 (#426)
0	0x41	Communication bit 4 (#426)
0	0x42	Communication bit 5 (#426)
0	0x43	Communication bit 6 (#426)
0	0x3A	Trigger event A occurred
0	0x3B	Trigger event B occurred
0	0x3C	Parameter set A active
		Warning
0	0x09	Overload
0	0x0A	Overload N-conductor
0	0x0B	Load shedding
0	0x0C	Ground fault
0	0x0D	Overtemperature
0	0x0E	µP-Error
0	0x0F	Phase unbalance Current
0	0x10	Load pick up
		Tripping operations
0	0x11	Overload L
0	0x12	Delayed short-circuit I
0	0x13	Instantaneous Short-circuit S
0	0x15	Ground fault G
0	0x16	Overload N-conductor N
0	0x17	Phase unbalance current
0	0x18	Phase unbalance voltage

Byte	Value	Meaning
0	0x19	Underfrequency
0	0x1A	Overfrequency
0	0x1B	Undervoltage
0	0x1C	Overvoltage
0	0x1D	Active power in normal direction
0	0x1E	Active power in reverse direction
0	0x1F	THD current
0	0x20	THD voltage
0	0x21	Reverse direction of rotation of phase
		Threshold
0	0x22	Overcurrent
0	0x23	Overcurrent N-conductor
0	0x24	Overcurrent ground fault
0	0x25	Phase unbalance current
0	0x26	Phase unbalance voltage
0	0x27	Long-time av. Current
0	0x28	Undervoltage
0	0x29	Overvoltage
0	0x2A	THD current
0	0x2B	THD voltage
0	0x2C	Peak factor
0	0x2D	Form factor
0	0x2E	Underfrequency
0	0x2F	Overfrequency
0	0x30	Active power in normal direction
0	0x31	Active power in reverse direction
0	0x32	Apparent power
0	0x33	Reactive power in normal direction
0	0x34	Reactive power in reverse direction
0	0x35	cos φ capacitive
0	0x36	cos φ inductive
0	0x37	Long-time mean value of active power
0	0x38	Long-time mean value of reactive power
0	0x39	Long-time mean value of apparent power

The table below shows the format (138) "Type of the metering function". It specifies which type of metering function is built in.

Table 8- 60 **Format (138) "Type of the metering function"**

Byte	Value	Meaning
0	0x00	No metering function
0	0x02	Metering function
0	0x03	Metering function PLUS

The table below shows the format (145) "Direction of incoming supply". The sign for active power and reactive power depend on the "Direction of incoming supply".

Table 8- 61 **Format (145) "Direction of incoming supply"**

Byte	Value	Meaning
0	0	From top to bottom
0	1	From bottom to top

The table below shows the format (146) "Direction of rotation of phase". The normal status of the direction of rotation of the phase can be set using this.

Table 8- 62 **Format (146) "Direction of rotation of phase"**

Byte	Value	Meaning
0	0	Right (e.g. L1 – L2 – L3)
0	1	Left (e.g. L1 – L3 – L2 or similar)

The table below shows the format (162) "Voltage transformer". The setting of the primary connection also influences the location of the measured voltage variables.

Table 8- 63 **Format (162) "Voltage transformer"**

Byte	Value	Meaning
0	0	The voltage transformer is delta-connected on the primary side.
0	1	The voltage transformer is star-connected on the primary side.

8.9.6 Data formats 307 to 373

The table below shows the format (307) "Tripping of the metering function" that displays the content of the last tripping operation by the extended protection function.

Table 8- 64 **Format (307) "Tripping of the metering function"**

Byte	Value	Meaning
0/1	0x0000	No tripping operation
0/1	0x0001	Phase unbalance current
0/1	0x0002	Phase unbalance voltage
0/1	0x0004	Active power in normal direction
0/1	0x0008	Active power in reverse direction
0/1	0x0040	Overvoltage
0/1	0x0080	Undervoltage
0/1	0x0100	Overfrequency
0/1	0x0200	Underfrequency
0/1	0x0400	THD current
0/1	0x0800	THD voltage
0/1	0x1000	Change of phase rotation

The table below shows the format (308) "Threshold warnings" that displays the currently pending threshold warnings.

Table 8- 65 **Format (308) "Threshold warnings"**

Byte	Bit	Meaning
1	0	cos φ capacitive
1	1	cos φ inductive
1	2	THD current
1	3	THD voltage
1	4	Peak factor
1	5	Form factor
1	6	Active power in normal direction
1	7	Active power in reverse direction
2	0	Long-time mean value of active power
2	1	Long-time mean value of apparent power
2	2	Long-time mean value of reactive power
2	3	Reactive power in normal direction
2	4	Reactive power in reverse direction
2	5	Apparent power
2	6	Overfrequency
2	7	Underfrequency
3	0	Overcurrent
3	1	Overcurrent ground fault
3	2	Overcurrent N-conductor

Byte	Bit	Meaning
3	3	Phase unbalance current
3	4	Long-tirm mean value of current
3	5	Undervoltage
3	6	Phase unbalance voltage
3	7	Overvoltage

The table below shows the format (309) "Harmonic analysis". To calculate, the value must be multiplied by the signed exponent.

Table 8- 66 **Format (309) "Harmonic analysis"**

Harmonic	Byte	Bit	Meaning
1.	0	—	**Harmonic current**: Exponent (signed char)
	1	—	**Harmonic current**: Value (unsigned char)
	2	—	Harmonic voltage: Exponent (signed char)
	3	—	Harmonic voltage: Value (unsigned char)
2.	4	—	**Harmonic current:** Exponent (signed char)
	5	—	**Harmonic current:** Value (unsigned char)
	6	—	Harmonic voltage: Exponent (signed char)
	7	—	Harmonic voltage: Value (unsigned char)
3. - 28.	8 ... 111	—	...
29.	112	—	**Harmonic current:** Exponent (signed char)
	113	—	**Harmonic current**: Value (unsigned char)
	114	—	Harmonic voltage: Exponent (signed char)
	115	—	Harmonic voltage: Value (unsigned char)

The table below shows the format (328) "Status of the switch" that transfers the data the BSS has collected via a micro switch.

Table 8- 67 **Format (328) "Status of the switch"**

Byte	Bit	Meaning
0	0	Switch is off
0	1	Switch is on
0	2	Switch has tripped (tripped signaling switch)
0	3	Switch is ready
0	4	Spring energy store is compressed
0	5	Switch on 1st auxiliary trip unit actuated
0	6	Switch on 2nd auxiliary trip unit actuated

The table below shows the format (331) Trip class (VL only). The value of the trip class is adapted to the connected motor.

Table 8- 68 **Format (331) "Trip class (VL only)"**

Byte	Value	Meaning
0	5	3-second delay @ 7.2 x rated current
0	10	6-second delay @ 7.2 x rated current
0	15	9-second delay @ 7.2 x rated current
0	20	12-second delay @ 7.2 x rated current
0	30	18-second delay @ 7.2 x rated current

The table below shows the format (343) "I^2t characteristic for S" via which the I^2t characteristic is switched on and off.

Table 8- 69 **Format (343) "I^2t characteristic for S"**

Byte	Value	Meaning
0	0	I^2t characteristic for delayed short-circuit protection switched off.
0	1	I^2t characteristic for delayed short-circuit protection switched on.

The table below shows the format (344) "I^2t characteristic for G" via which the I^2t characteristic is switched on and off.

Table 8- 70 **Format (344) "I^2t characteristic for G"**

Byte	Value	Meaning
0	0	I^2t characteristic for ground-fault protection switched off.
0	1	I^2t characteristic for ground-fault protection switched on.

The table below shows the format (345) "I^4t characteristic for L" via which the I^4t characteristic is switched on and off.

Table 8- 71 **Format (345) "I^4t characteristic for L"**

Byte	Value	Meaning
0	0	I^4t characteristic for overload protection switched off.
0	1	I^4t characteristic for overload protection switched on.

The table below shows the format (346) "Thermal memory" via which the thermal memory is switched on and off.

Table 8- 72 **Format (346) "Thermal memory"**

Byte	Value	Meaning
0	0	Thermal memory switched off
0	1	Thermal memory switched on

The table below shows the format (347) "Phase loss sensitivity" via which the phase loss sensitivity is switched on and off.

Table 8- 73 **Format (347) "Phase loss sensitivity"**

Byte	Value	Meaning
0	0	Phase loss sensitivity switched off
0	1	Phase loss sensitivity switched on

The table below shows the format (370) "Active parameter set" that specifies which of the parameter sets is active.

Table 8- 74 **Format (370) "Active parameter set"**

Byte	Value	Meaning
0	0	Parameter set A active
0	1	Parameter set B active

The table below shows the format (373) "Phase number" that specifies the phase number of the most loaded phase and the phase of the tripping operation.

Table 8- 75 **Format (373) "Phase number"**

Byte	Value	Meaning
0	0	Phase L1
0	1	Phase L2
0	2	Phase L3
0	3	N-conductor
0	4	Ground fault

8.9.7 Data formats 401 to 426

The table below shows the format (401) "Trip unit: tripping operations'", which shows the last unacknowledged tripping operation of the trip unit.

Table 8- 76 **Format (401) Trip unit: "tripping operations"**

Byte	Value	Meaning
0	0x00	No tripping operation
0	0x01	Overload (L)
0	0x02	Instantaneous short circuit (I)
0	0x04	Short-time delayed short circuit (S)
0	0x08	Ground fault (G)

The table below shows the format (402) "Trip unit: alarms" via which the trip unit communicates the currently pending alarms.

Table 8- 77 **Format (402) Trip unit: "Alarms"**

Byte	Bit	Meaning
0	0	Overload
0	1	Overload N-conductor
0	2	Load shedding
0	3	Load pick up
0	4	Phase unbalance current
0	5	Microprocessor fault
0	6	Ground fault
0	7	Overtemperature
1	0	Leading overload tripping alarm
1	1	Short-time mean value current

The table below shows format (405) "Contact status" that is calculated empirically from the maintenance information.

Table 8- 78 **Format (405) "Contact status"**

Byte	Value	Meaning
0	0	No maintenance necessary yet on main contacts (Note: Despite this, the main contacts must be checked after every tripping operation!)"
0	1	Perform immediate visual inspection on main contacts.
0	2	Prepare maintenance of the main contacts

The table below shows the format (406) "Control trip unit" via which the statistical information can be reset, among other things.

Table 8- 79 **Format (406) "Control trip unit"**

Byte	Value	Meaning
0/1	0x0002	Delete last trip signal in trip unit
0/1	0x0022	Reset counter and statistical information of the trip unit

The table below shows the format (410) "Ground fault detection" with which the ground fault detection method is set.

Table 8- 80 **Format (410) "Ground fault detection"**

Byte	Value	Meaning
0	0	Detecting the current against ground via an external transformer
0	1	Calculation of the current against ground using vectorial summation
0	2	Detecting the current against ground using vectorial summation (alarm) and an external transformer (tripping)

The table below shows format (411) "N transformer" that indicates whether an N transformer is connected.

Table 8- 81 **Format (411) "N transformer"**

Byte	Value	Meaning
0	0	No transformer in the N-conductor
0	1	Transformer in the N-conductor

The table below shows the format (412) "'Trip unit type" that indicates which trip unit is used and how it is equipped.

Table 8- 82 **Format (412) "Trip unit type"**
For 3WL

Byte	Value	IEC/UL	Meaning
0	4	IEC	ETU45B
0	5	IEC	ETU45B with display
0	6	IEC	ETU45B with ground fault
0	7	IEC	ETU45B with display and ground fault
0	13	IEC	ETU76B
0	14	IEC	ETU76B with ground fault
0	17	UL	ETU748
0	18	UL	ETU748 with display
0	19	UL	ETU748 with ground fault
0	20	UL	ETU748 with display and ground protection
0	22	UL	ETU776
0	23	UL	ETU745

Table 8- 83 **Format (412) "Trip unit type"**
For 3VL

Byte	Value	IEC/UL	Meaning
0	15	IEC	LCD ETU
0	16	IEC	LCD ETU with motor protection
0	27	IEC	ETU with "LI" protection
0	28	IEC	ETU with "LS" protection
0	29	IEC	ETU with motor protection and adjustable tripping class
0	30	UL	ETU with "LI" protection
0	31	UL	ETU with "LS" protection
0	32	UL	ETU with motor protection
0	33	IEC	LCD ETU with "LSI" protection and ground fault alarm
0	34	IEC	ETU with motor protection and "I" protection
0	35	UL	LCD ETU
0	37	UL	LCD ETU with "LSI" protection and ground fault alarm

The table below shows the format (421) "Parameter ZSI".

Table 8- 84 **Format (421) "Parameter ZSI"**

Byte	Bit	Meaning	
0	0	ZSI short-circuit active	
0	1	ZSI ground fault active	
0	2	Not used	
0	3	Not used	
0	4/5	0	ZSI switched off
		1	ZSI input and output active
		2	ZSI output active
0	6	Not used	
0	7	Not used	

The table below shows the format (426) "Communication bit" via which signals can be triggered indirectly via the communication system and applied to the configurable output module as a switching specification.

Table 8- 85 **Format (426) "Communication bit"**

Byte	Bit	Meaning
0	0	Communication bit 1
0	1	Communication bit 2
0	2	Communication bit 3
0	3	Communication bit 4
0	4	Communication bit 5
0	5	Communication bit 6

List of abbreviations

A

A.1 List of abbreviations

The abbreviations used in the manual are explained below.

AC	Alternating current
AWG	American Wire Gauge
BDA PLUS	Breaker Data Adapter PLUS
BSS	Breaker Status Sensor
COM16	Communication module 3WL
COM11	Communication module 3VL
COM21	Communication module 3VL
CUB -	CubicleBUS, connection "-"
CUB +	CubicleBUS, connection "+"
DC	Direct current
DIN	German Industry Standard
ED	ON time; exceeding the permissible ON time results in destruction
ESD	Electrostatic sensitive device
ETU	Electronic trip unit, solid-state overcurrent trip unit
EN	European standard
EMC	Electromagnetic compatibility
EXTEND.	Extended protection function
F1	First shunt release
F2	Second shunt release
F3	Undervoltage release
F4	Undervoltage release with delay
F5	Tripping solenoid
F7	Remote reset solenoid
FIFO memory	First in/first out memory
I/O	In/Out, input and output module
I tripping operation	Instantaneous short-circuit trip
ID	Identification number
IEC	International Electrotechnical Commission
L1	Conductor/phase 1
L2	Conductor/phase 2
L3	Conductor/phase 3
LED	Light emitting diode
LV	Low-voltage
M	Motor

MV	Medium-high voltage
N	Neutral conductor
NC	Normally closed contact
S	Normally open contact
S1	Signaling switch, switching position
S10	Electric ON
S12	Motor cutout switch
S13	Cutout switch for remote reset
S14	Cutout switch for shunt release F1 (overexcited)
S15	Cutout switch for switch-on solenoid Y1 (overexcited)
S22	Signaling switch on 1st auxiliary trip unit
S23	Signaling switch on 2nd auxiliary trip unit
S24	Tripped signaling switch
S42	Signaling switch on CubicleBUS side on first auxiliary trip unit F1
S43	Signaling switch on CubicleBUS side on second auxiliary trip unit F2, F3 or F4
S7	Signaling switch, switching position
S8	Signaling switch, switching position
ST	Shunt release
T.U. ERROR	Trip unit error, fault in overcurrent trip unit
TEST	Test position
t_{sd}	Delay time for short time-delayed short-circuit protection
t_{ZSI}	Guaranteed non-tripping time
UL	Underwriters Laboratories Inc.
UVR	Undervoltage release (instantaneous)
UVR t_d	Undervoltage release (delayed)
VDE	Association of German Electrical Engineers
VT	Voltage transformer
X	Terminal marking according to DIN
Y1	Switch-on solenoid
ZSI	Zeitverkürzte Selektivitätssteuerung/Zone Selective Interlocking

You can find more abbreviations, especially with regard to possible settings, in the 3WL Manual.

Glossary

3WL motorized operating mechanism

A geared motor automatically charges the stored-energy spring mechanism as soon as voltage has been applied to the auxiliary supply connections. After one closing operation, the stored-energy spring mechanism is automatically charged for the next closing operation.

Auxiliary trip unit

Undervoltage releases and shunt releases are available.

BSS module

Breaker Status Sensor - for collecting the information about the status of the circuit breaker by means of signaling switch, and the transfer of this information to the CubicleBUS.

COM16 module

The communication module is the interface adapter for

- Converting the CubicleBUS signals to MODBUS signals and vice versa
- Provision of three isolated outputs for control functions (ON, OFF, 1x freely available)
- One input, freely usable for information from the switchgear
- Additional function when used as slide-in circuit breaker:
  - Recording the position of the circuit breaker in the guide frame with the signaling switches S46, S47 and S48.

CubicleBUS

3WL data bus system in the circuit breaker and in the vicinity of the circuit breaker with interface (COM16) to the fieldbus (MODBUS RTU)

Energy transformer

Generates energy (power supply) for the internal supply of the overcurrent release.

Manual connector coding

The manual connectors can be coded to prevent the auxiliary conductor connections from being connected incorrectly.

Mechanical interlock

This function supports different types of mechanical interlocking for circuit breakers.

Position indicator

This indicates the position of the circuit breaker (disconnected/test/operating position) in the guide frame.

Position signaling switch

This is used for remotely displaying the circuit breaker position in the guide frame.

Rated current coding

The rated current is coded in the factory, that is, each circuit breaker can only be used in a guide frame with the same rated current.

Remote resetting

Using the optional remote reset solenoid, the electrical signal of the tripped signaling switch and the reset button are reset.

Safe OFF

This additional function prevents the circuit breaker from closing and fulfills the isolation condition in the OFF position to IEC 60947-2:

- "Mechanical OFF" button pressed
- Main contacts open
- Withdrawable circuit breakers: racking handle removed
- The various interlocking conditions are fulfilled

Shunt release (F1, F2)

For remotely opening the circuit breaker and blocking it against closing.

Switching position signaling switch

This auxiliary switch is actuated depending on the switching status of the circuit breaker.

Undervoltage release (delayed)

For remotely opening and interlocking the circuit breaker. Voltage dips must not cause the circuit breaker to open.

Undervoltage release (instantaneous/short-time delay)

For remotely opening and interlocking the circuit breaker as well as for using the circuit breaker in EMERGENCY OFF circuits (to EN 60204-1 / DIN VDE 0113 Part 1) in conjunction with a separate EMERGENCY OFF device. Brief voltage dips (t_d < 80 ms for instantaneous undervoltage release, t_d < 200 ms for short-time delay undervoltage release) must not cause the circuit breaker to open.

Index

"

"Parameters" view
powerconfig,

A

Accessories
SENTRON VL, 86
Analog output module
Calculation of full-scale value, 76
Interfaces, 74
Maximum assignment, 75
Measured value selection, 75
Technical data, 79
Test function, 79

B

Brief description
powerconfig, 147

C

COM21
Communication link ETU, 96
Connection of optional motorized operating mechanism, 97
LED indicator, 102
Pin assignment, 95
Setting the MODBUS address, 94
Write protection, 96
Configuration
Digital output module, 71
CubicleBUS
Connection with COM16, 62
Connection without COM16, 61
Installation guidelines, 60
LED indicator, 63
Maximum configuration, 59
Power requirement SENTRON WL, 80
Selection of power supply, 82
Test input/output, 64

D

Data point, 157
Delay time
Rotary coding switch, 70
Delivery form
powerconfig, 148
Digital configurable output module
Technical data, 71
Digital input module, 66
Parameter set changeover, 67
Technical data, 68
Digital output module
Configuration, 71
LED indicator, 73
Output assignment, 72
Rotary coding switch, 68
Status detection, 72
Technical data, 70
Threshold delay, 72

F

Forcing, 64
Function overview
Overcurrent release, 89
VL160, 89
VL1600, 89
Function testing device
ZSI, 118

I

Internet download
powerconfig, 148

M

Metering function PLUS, 42

O

Offline mode
powerconfig, 149
Online mode

powerconfig, 149

P

Pin assignment
X3, 59
powerconfig, 147
"Parameters" view,
Brief description, 147
Delivery form, 148
Internet download, 148
Offline mode, 149
Online mode, 149
Software requirements, 148
PROFIBUS data transfer
Integration of circuit breakers, 123
Protection functions
SENTRON VL, 88

R

Rotary coding switch, 67
Delay time, 58, 70

S

SENTRON VL
Accessories, 86
Brief description, 85
Overcurrent tripping systems, 88
Properties of the trip units, 88
Protection functions, 88
Software requirements
powerconfig, 148

T

Technical data
Analog output module, 79
Digital configurable output module, 71
Digital input module, 68
Digital output module, 70
Time selectivity, 105

W

Write protection
COM21, 96

Z

ZSI
3VL applications, 120
3VL COM20/COM21, 119
3VL configuration, 120
3VL connection, 120
3VL LED, 121
3WL application cases, 118
3WL connection, 118
Configuration, 118
Function testing device, 118
LED, 118
SENTRON 3WL, 117
Test function, 118

Service & Support

SENTRON
www.siemens.com/sentron

Download catalogs and information material:
www.siemens.com/lowvoltage/catalogs

Newsletter – always up to date:
www.siemens.com/lowvoltage/newsletter

E-business in the A&D Mall:
www.siemens.com/lowvoltage/mall

Online Support:
www.siemens.com/lowvoltage/support

Contact for all technical information:
Technical Assistance
e-Mail: support.automation@siemens.com
http://support.automation.siemens.com

Siemens AG
Industry Sector
Building Technologie Division
Postfach 10 09 53
93009 Regensburg
GERMANY

Subject to change without prior notice
Order No.: A5E02126891-02

© Siemens AG 2011

www.siemens.com/automation